DUNE NDS Quarterly Report – August 2015

1. Beamline Measurements Progress (Geoff Mills and Jan Boissevain)

Figure 1 shows a schematic drawing of the Positioner that will hold the Cherenkov counter and that will be installed in Alcove 1, while Figure 2 shows a schematic drawing of the Alcove 1 layout, showing the Positioner mounted behind the NuMI absorber. Finally, Figure 3 shows a schematic drawing of the completed beamline muon detectors located downstream of the LBNF absorber. The Positioner is mounted directly downstream of the absorber and is followed by an array of diamond detectors. The stopped muon detectors are located behind various thicknesses of absorber.

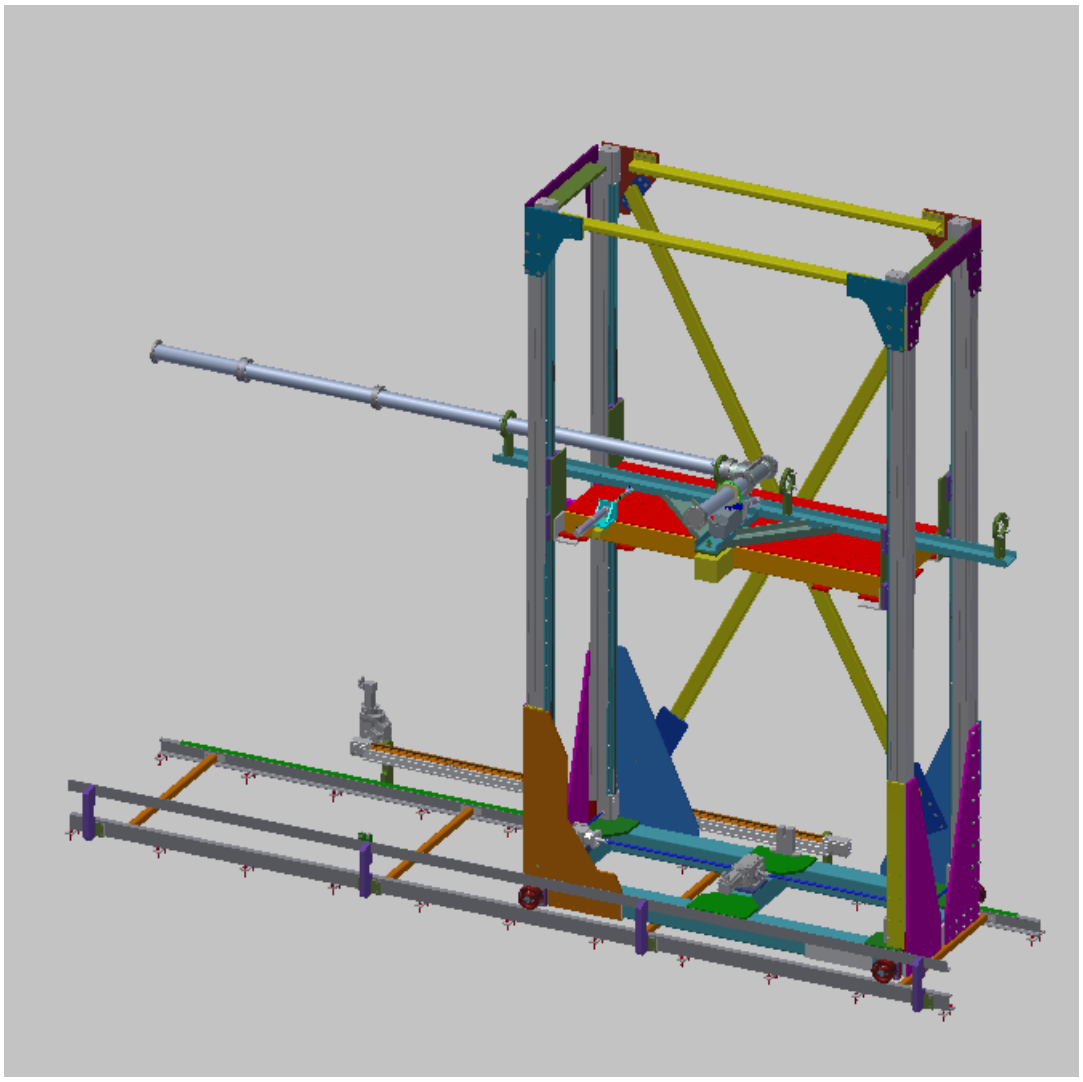

Figure 1: A schematic drawing of the Positioner that holds the Cherenkov counter and that will be installed in Alcove 1.

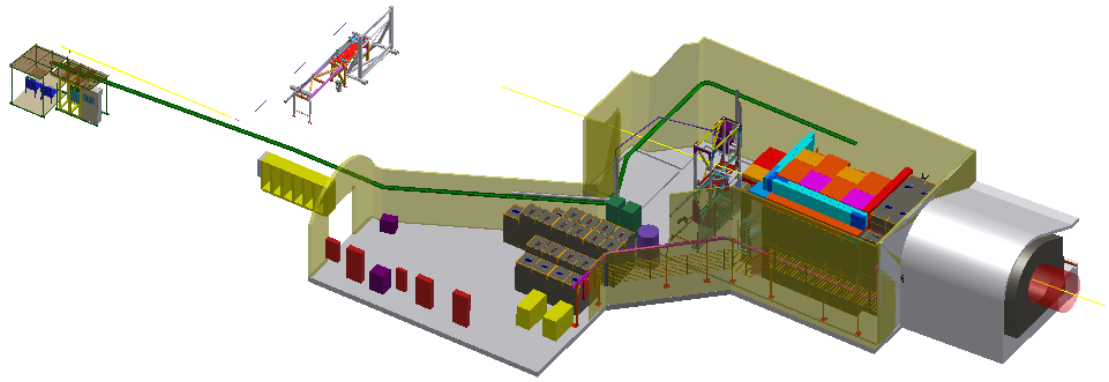

Figure 2: A schematic drawing of the Alcove 1 layout, showing the Positioner mounted behind the NuMI absorber.

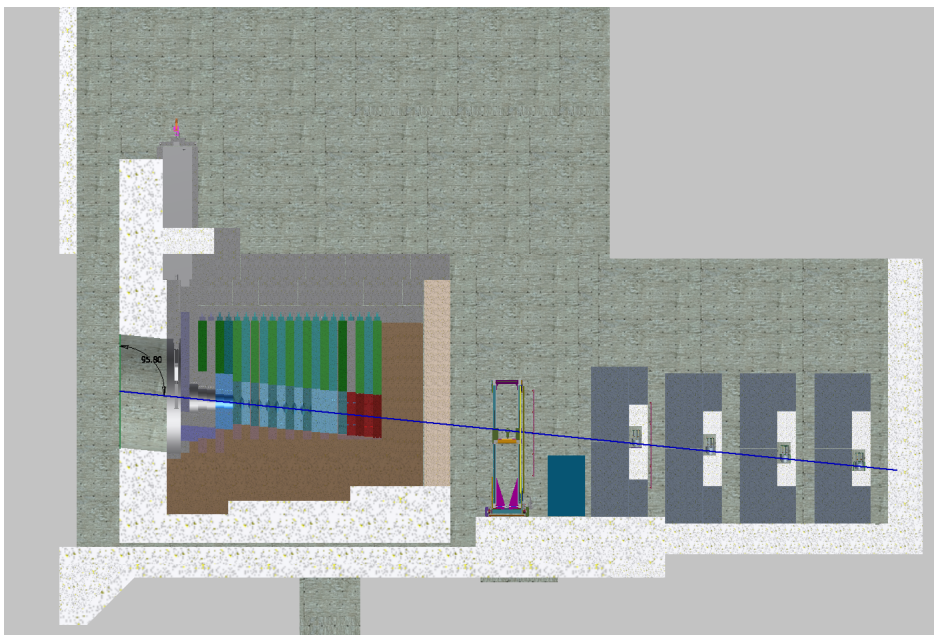

Figure 3: A schematic drawing of the beamline muon detectors located downstream of the LBNF absorber.

2. Stopped Muon Detector Design (Geoff Mills and Jan Boissevain)

A schematic drawing of a stopped muon detector is shown in Figure 4. The inner volume is filled with mineral oil, while the outer volume is filled with liquid scintillator. The phototubes will be gated off during the beam spill, which will allow a measurement of the muon lifetime and, therefore, the μ^-/μ^+ ratio. Note that μ^- will have a lifetime of 2.0 μs, while μ^+ will have a lifetime of 2.2 μs.

3. CD-1R Review (Christopher Mauger)

The near neutrino detector design was presented at the recent CD-1R review at Fermilab. There were no unresolved issues.

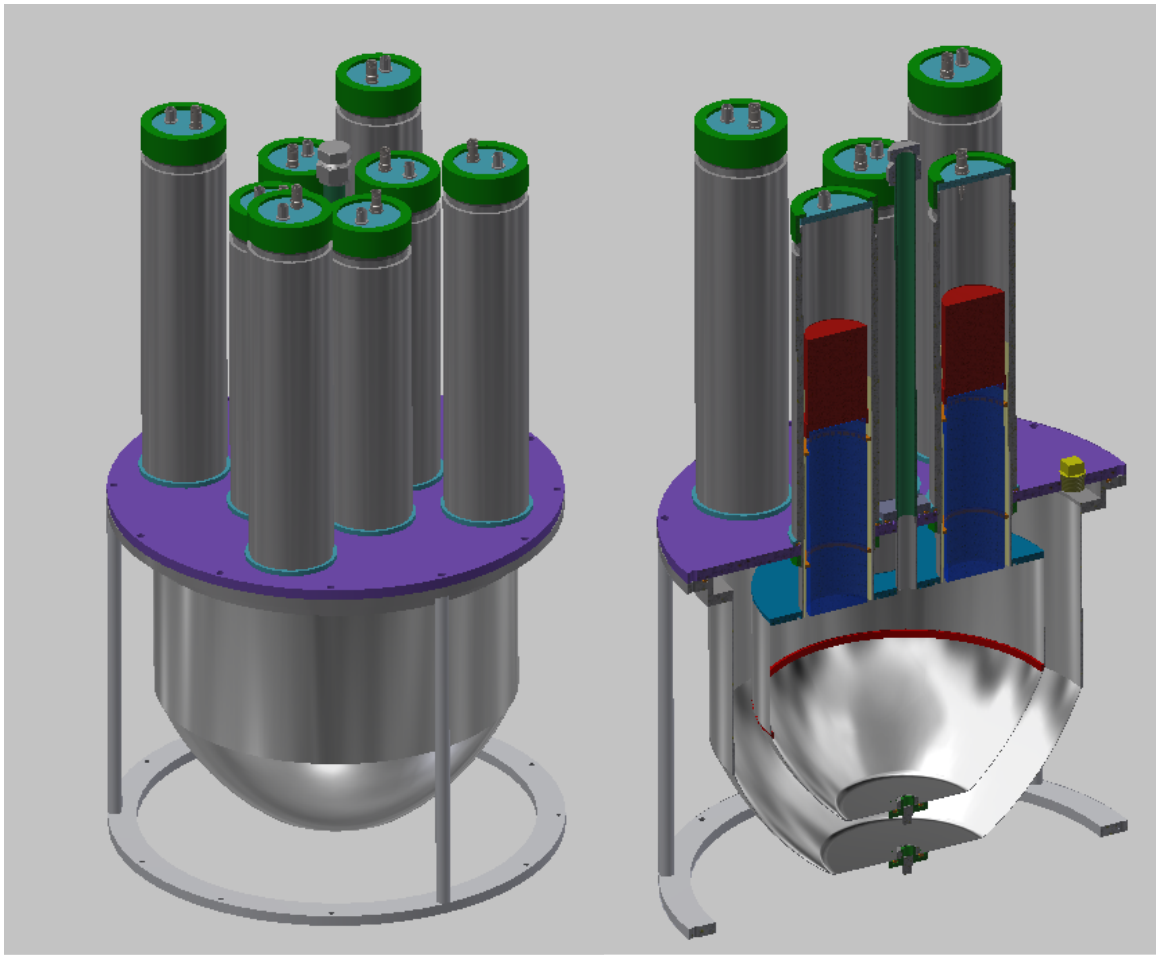

Figure 4: A schematic drawing of a stopped muon detector, which will determine the μ^-/μ^+ ratio by measuring the muon lifetime.