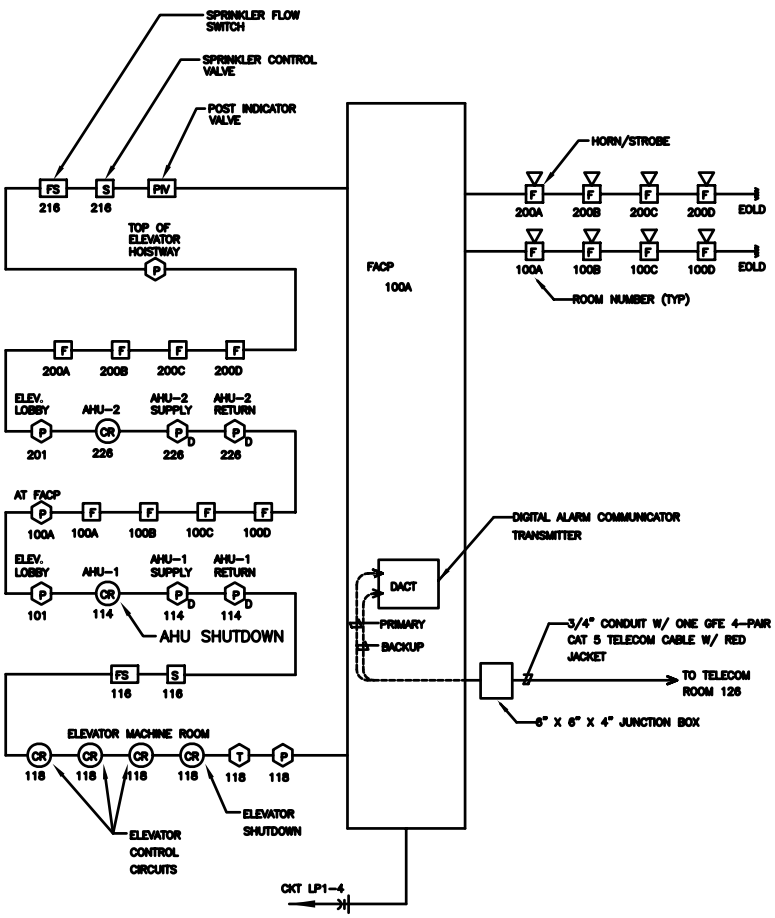

ADDRESSABLE FIRE ALARM SYSTEM RISER DIAGRAM

SCALE: NONE

SYSTEM OUTPUTS

	SYSTEM INPUTS	A	B	C	D	E	F	G	H	I	J	K	L	M	N	O	P	Q
		FACP ANNUNCIATION											NOTIFICATION				FIRE SAFETY CONTROL	
		ACTUATE COMMON ALARM SIGNAL INDICATOR	ACTUATE AUDIBLE ALARM SIGNAL	ACTUATE COMMON SUPERVISORY SIGNAL INDICATOR	ACTUATE AUDIBLE SUPERVISORY SIGNAL	ACTUATE COMMON TROUBLE SIGNAL INDICATOR	ACTUATE AUDIBLE COMMON TROUBLE SIGNAL	DISPLAY CHANGE OF STATUS ON FACP SCREEN	ACTUATE EVACUATION SIGNALS	TRANSMIT FIRE ALARM SIGNAL TO CENTRAL STATION	TRANSMIT SUPERVISORY SIGNAL TO CENTRAL STATION	RECALL ELEVATOR TO PRIMARY RECALL FLOOR	RECALL ELEVATOR TO ALTERNATE RECALL FLOOR	ACTUATE THIRD ELEVATOR CONTROL CIRCUIT	SHUTDOWN ELEVATOR (SHUNT TRIP CIRCUIT BREAKER)	STOP FIRST FLOOR AIR HANDLING UNIT	STOP SECOND FLOOR AIR HANDLING UNIT
1	MANUAL FIRE ALARM STATION – FIRST FLOOR	●	●					●	●	●								
2	MANUAL FIRE ALARM STATION – SECOND FLOOR	●	●					●	●	●								
3	ELEVATOR LOBBY SMOKE DETECTOR – GROUND FLOOR	●	●					●	●	●				●				
4	ELEVATOR LOBBY SMOKE DETECTOR – SECOND FLOOR	●	●					●	●	●			●					
5	ELEVATOR MACHINE ROOM/HOISTWAY SMOKE DETECTOR	●	●					●	●	●			●		●			
6	ELEVATOR MACHINE ROOM HEAT DETECTOR	●	●					●	●	●			●			●		
7	FIRST FLOOR AHU DUCT SMOKE DETECTOR	●	●					●	●	●							●	
8	SECOND FLOOR AHU DUCT SMOKE DETECTOR	●	●					●	●	●								●
9	WATERFLOW – FIRST FLOOR	●	●					●	●	●			●				●	●
10	WATERFLOW – SECOND FLOOR	●	●					●	●	●			●				●	●
11	SPRINKLER CONTROL VALVE – FIRST FLOOR			●	●			●			●							
12	SPRINKLER CONTROL VALVE – SECOND FLOOR			●	●			●			●							
13	FIRE ALARM AC POWER FAILURE			●	●			●			●							
14	FIRE ALARM SYSTEM LOW BATTERY					●	●	●				●						
15	OPEN CIRCUIT					●	●	●				●						
16	GROUND FAULT					●	●	●				●						
17	NOTIFICATION APPLIANCE CIRCUIT SHORT					●	●	●				●						
18	DACT TRANSMISSION CHANNEL FAILURE					●	●	●				●						

FIRE ALARM SYSTEM INPUT/OUTPUT MATRIX

DESIGNER:
EDIT FIRE ALARM RISER DIAGRAM AND INPUT/OUTPUT MATRIX TO BE PROJECT-SPECIFIC. IN CONSTRUCTION DRAWINGS PUT RISER DIAGRAM AND INPUT/OUTPUT MATRIX ON SEPARATE SHEETS IN ACCORDANCE WITH THE LANL DRAFTING MANUAL.

DRAWING DEVELOPED FOR ML-3/ML-4 PROJECTS. FOR ML-1/ML-2, ADDITIONAL REQUIREMENTS AND QA REVIEWS ARE REQUIRED. (REMOVE THIS NOTE WHEN INSERTED INTO A DRAWING PACKAGE).

NO	DATE	CLASS REV	ADC	DESCRIPTION	DRN	DSGN	CHKD	SUB	APP
2	7-12-05			UPDATE TITLE BLOCK	LT	DP	RD	DP	TO
1	11-10-02			NEW DRAWING NO., CORRECTED LAYERS, CHANGED TO ASSEMBLABLE SHEETS, REPLACES EC-7008	SB	DP	DW	DP	TO

ENGINEERING STANDARDS PROGRAM

ENGINEERING STANDARDS MANUAL

FIRE ALARM RISER DIAGRAM AND INPUT/OUTPUT MATRIX

BLDG TA-

DRAWN D.W. POWELL
DESIGN D.W. POWELL
CHECKED D. WINNELL
DATE 09-23-02

SUBMITTED DAVID W. POWELL
APPROVED FOR RELEASE TOBIN CRUCH

Los Alamos National Laboratory
PO Box 1663
Los Alamos, New Mexico 87545

SHEET
OF

CLASSIFICATION: UNC
REVIEWER: DONALD WAGMAN
DATE:

PROJECT ID CHAPTER 7
DRAWING NO ST-D5030-2
REV 2