In-Situ Corrosion Monitoring of 316 SS Containers
94-1 R&D End Of Year Technical Review
10/21/02

Rene Chavarria (NMT-15), Dave Koleman (NMT-15), Scott Lillard (MST-6)

Materials Corrosion and Environmental Effects Laboratory
Los Alamos National Laboratory
Los Alamos, NM, USA 87545

DOE-STD-3013-99 states that containers incorporate 30 wt% to 100 wt% Pu (< 19W). The containers may also incorporate:

Ga bearing compounds from weapons Pu
Water (up to **0.5 wt%**) / H_2 / O_2
Salts / chlorinated compounds
Elevated temperature (Maximum excursion Temperature = **250°C**)
Ionizing radiation
Welds (inner and outer containers)

Expected container materials:

Outer: 316L "Pressure Vessel". 1 or 2 welds.
Inner: 316 SS. Laser cut and laser welded.
Convenience container (for metal): 304L body, 416 lid.
Convenience container (for oxide): 316 body, 416 lid.

3013 Containers - Potential Failure Mechanisms

- Corrosion:
  - Ga
  - Cl
  - H_2O
  - H_2O Radiolysis Products
  - Molten Salt
  - Sensitization (Thermal or Radiation-Induced)
  - Weld
- Environmental Cracking:
  - "Conventional" S.C.C.: H_2O / O_2 / Cl^- / Cl_2 / HCl
  - Radiolysis
  - Welds
  - Ga Metal Embrittlement
  - Molten Salt
  - Sensitization (Thermal or Radiation-Induced)
- Embrittlement:
  - Radiation
  - H_2
  - Weld
  - Transmutation
- Alloying:
  - Ga / Fe
  - Pu / Fe

Equivalent circuit

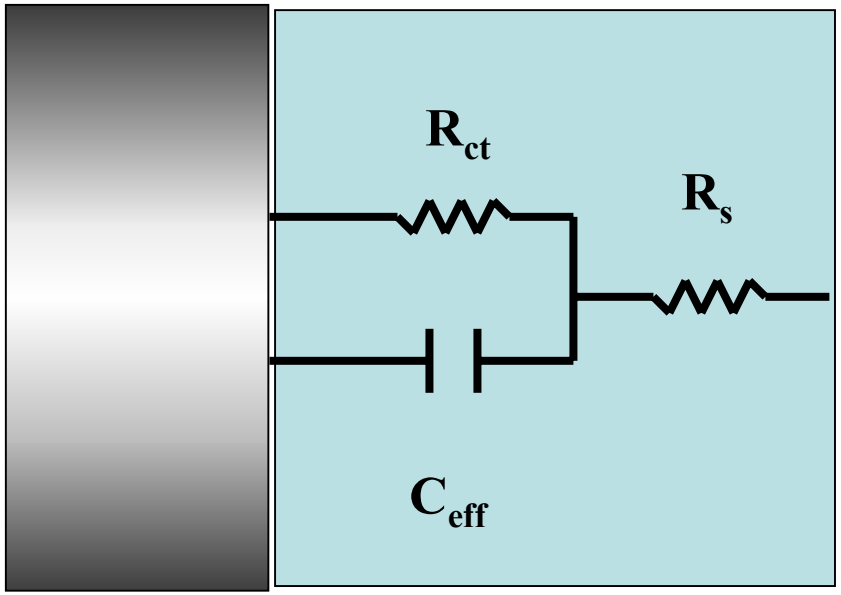

Metal **Electrolyte**

Equivalent circuit perturbation

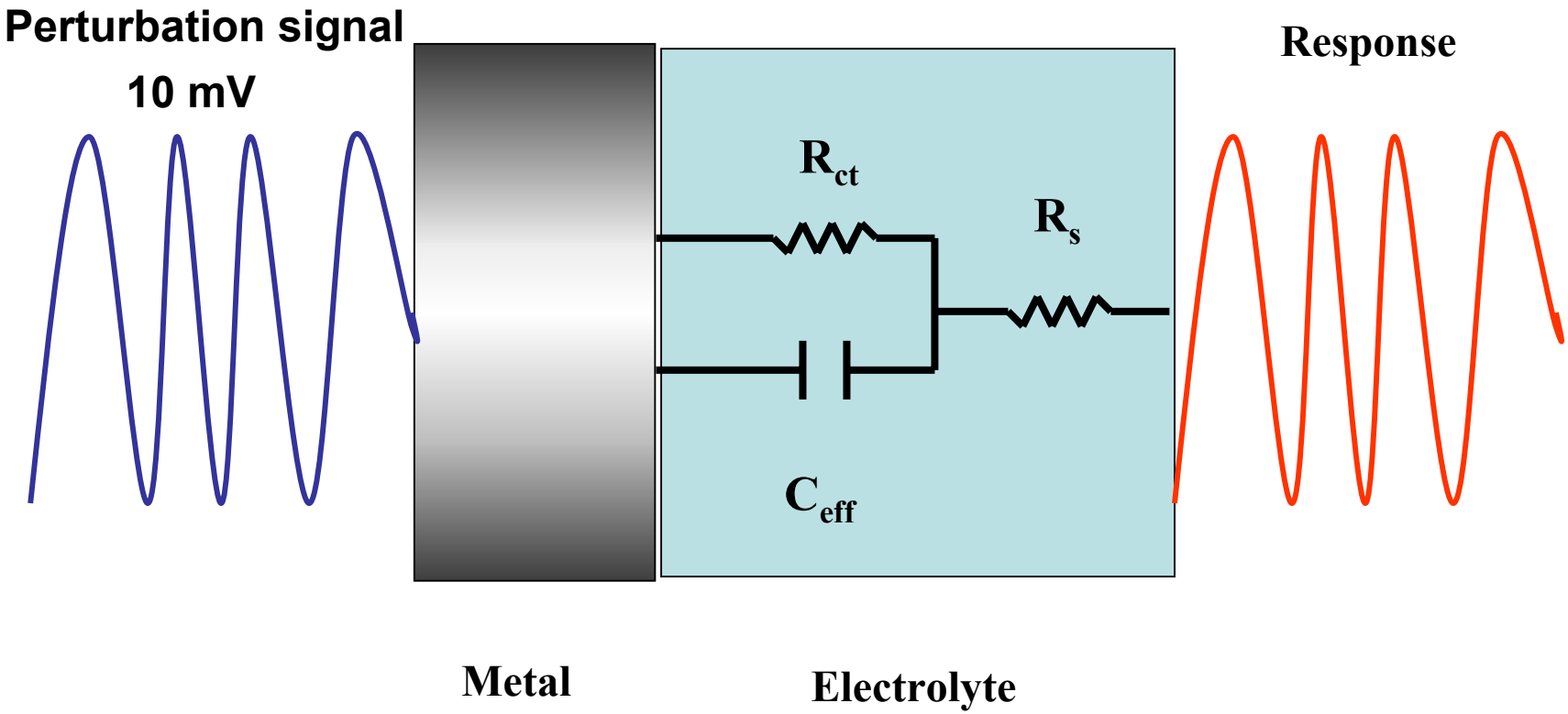

Electrochemical Impedance Spectroscopy

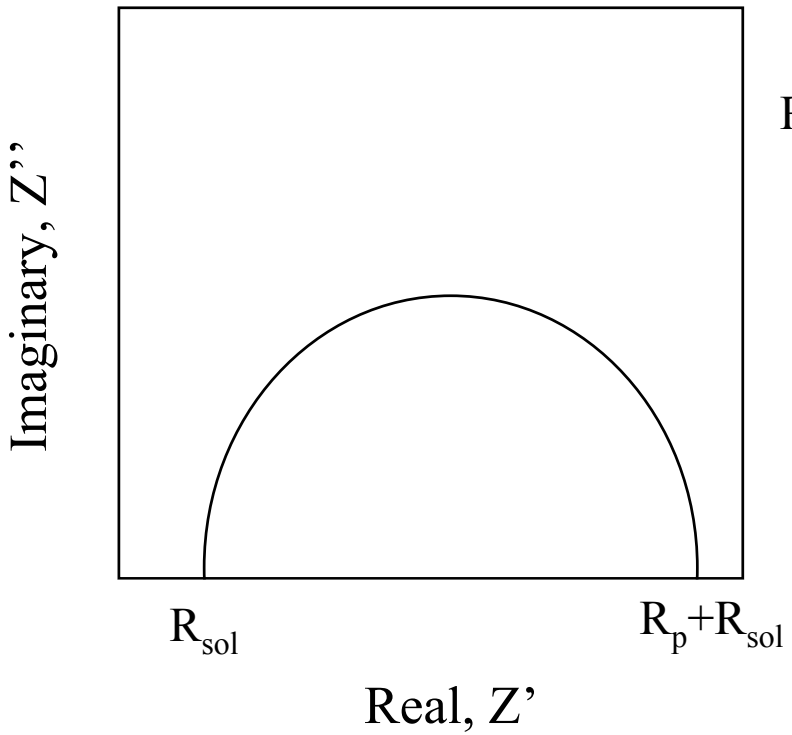

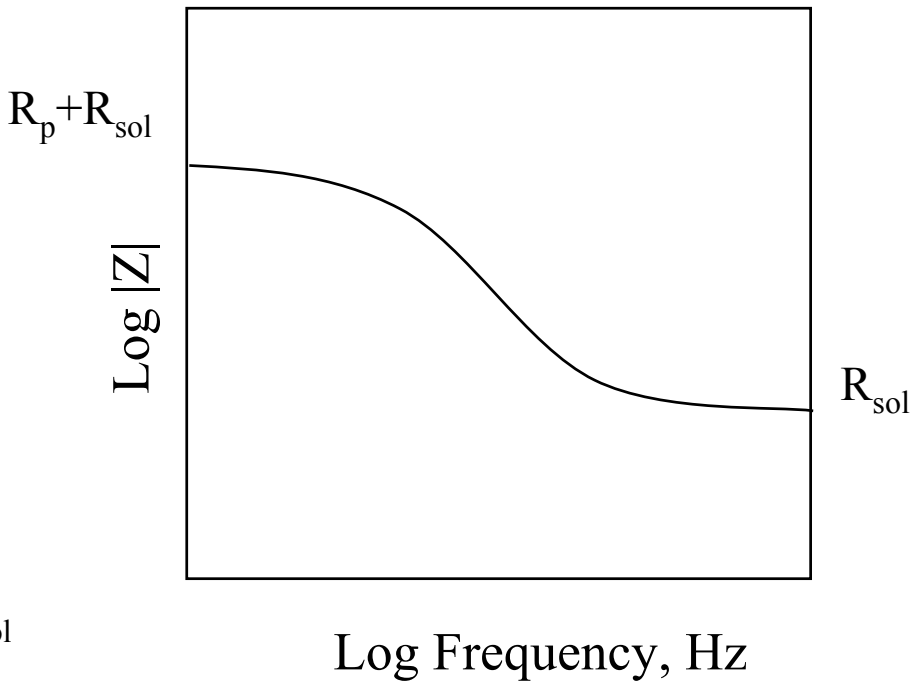

In-Situ Corrosion Monitoring

- Atmospheric corrosion rate monitor (ACRM)
  - Linear polarization resistance
  - Electrochemical Impedance Spectroscopy

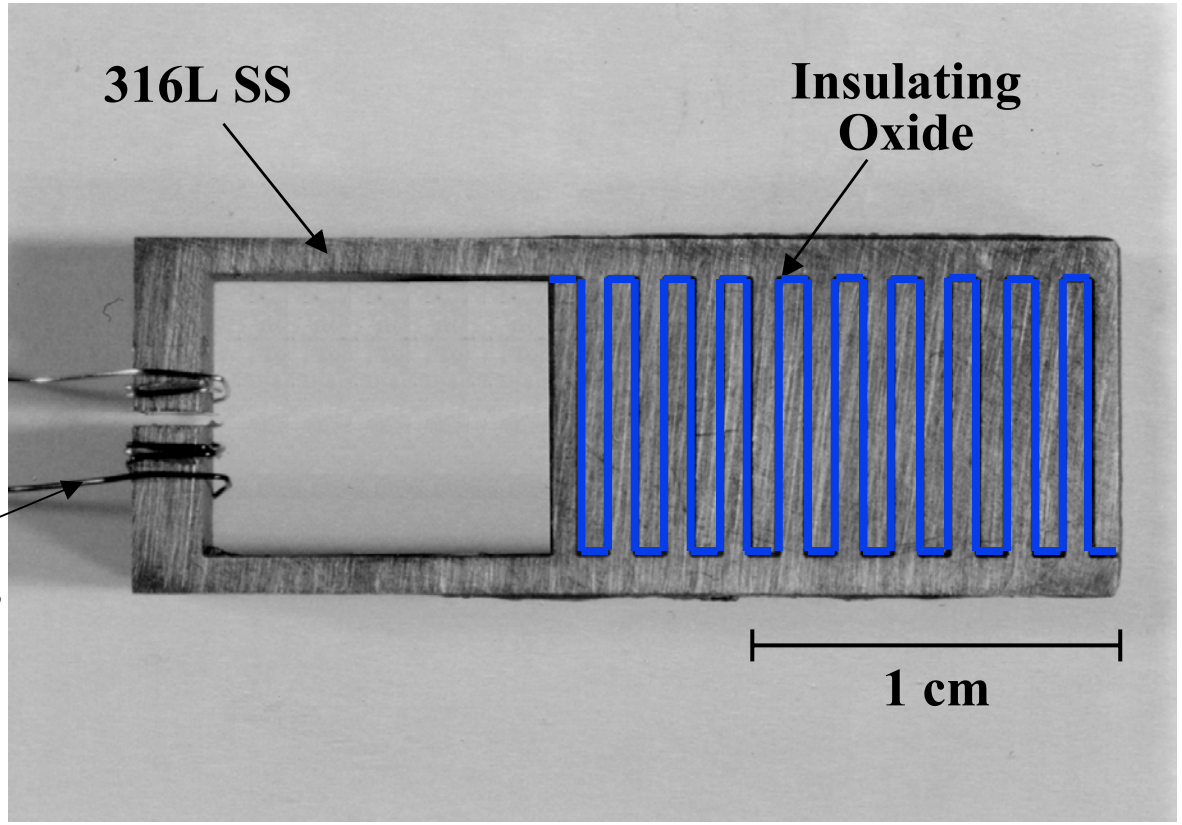

In-Situ Corrosion Monitoring

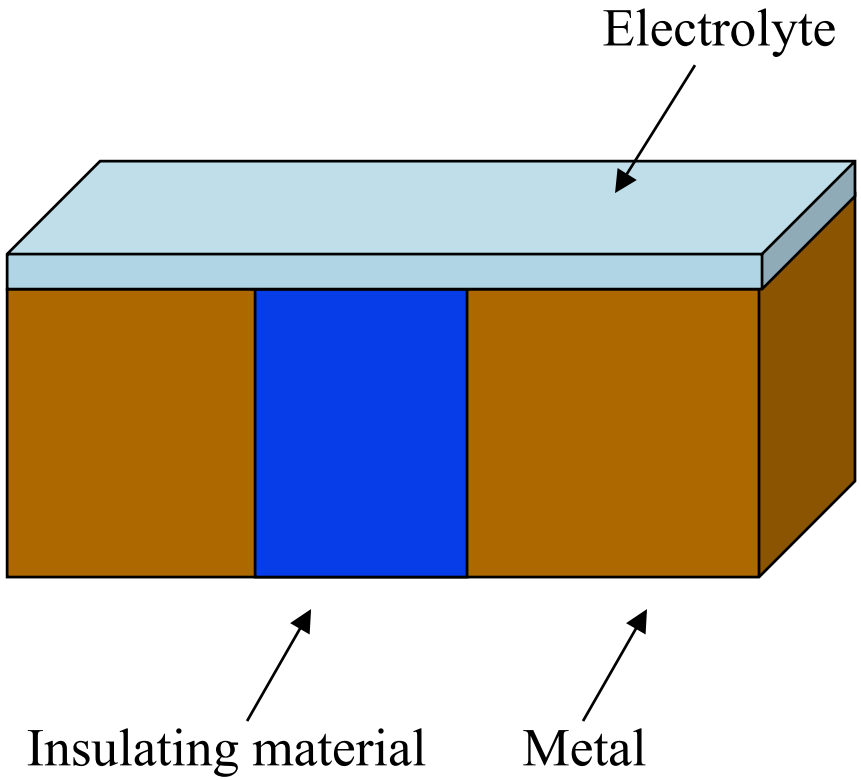

Nyquist plot for ACRM probe exposed to a RH 100 at 21 °C

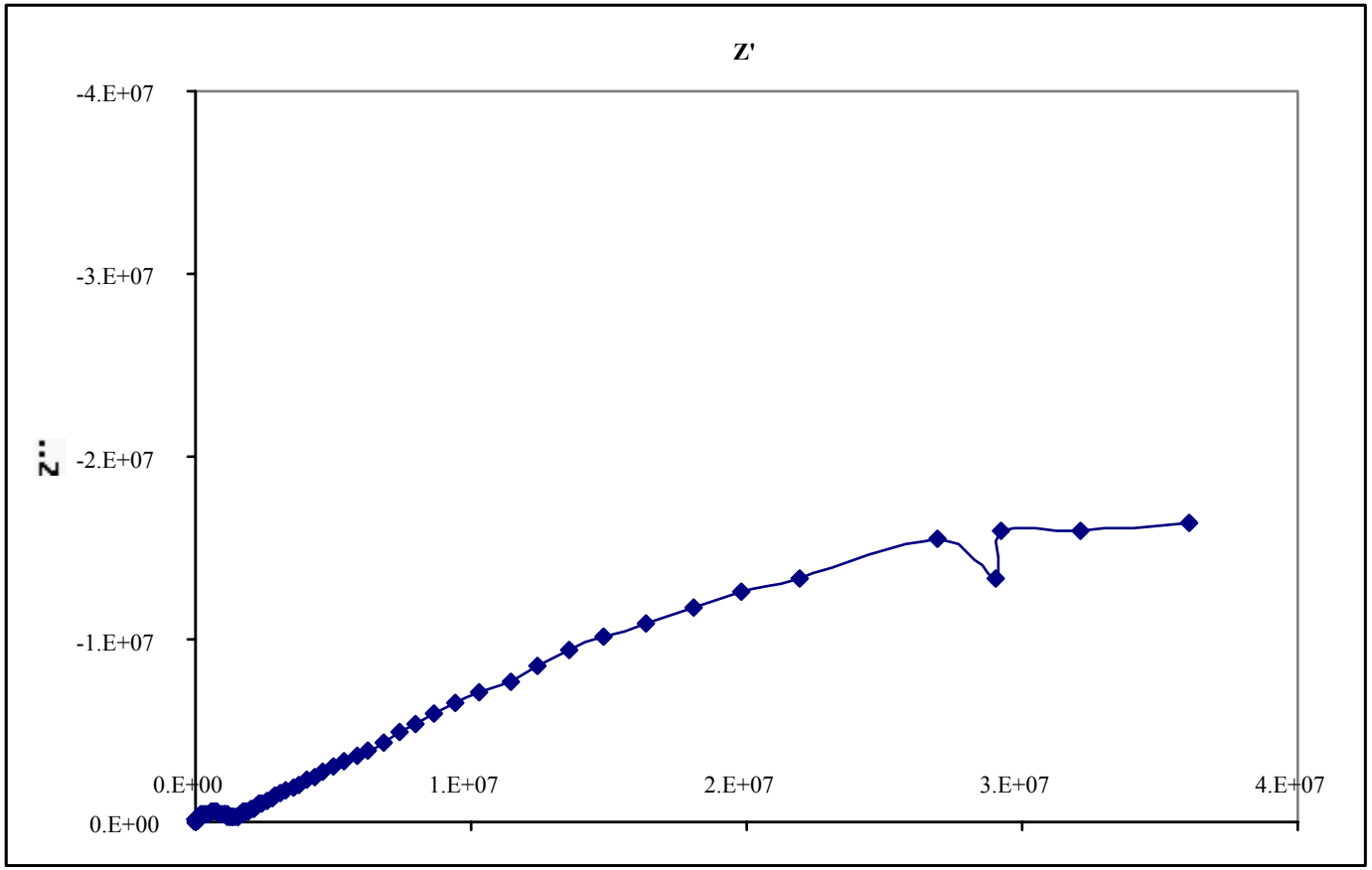

Unstable system

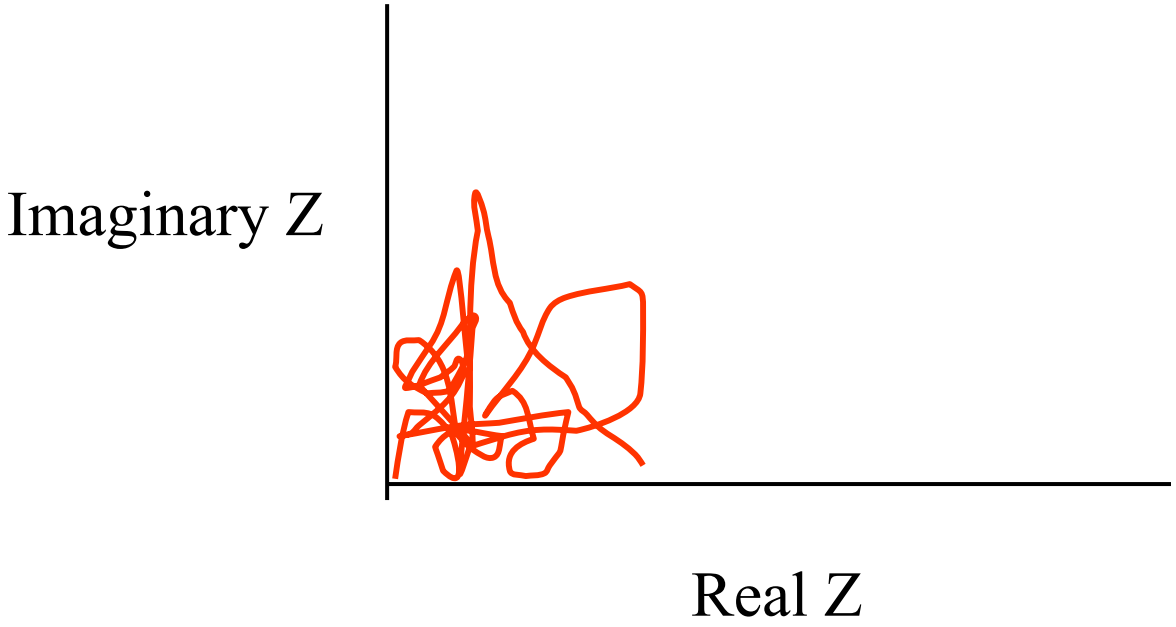

Nyquist plot for unstable system

Open circuit potential

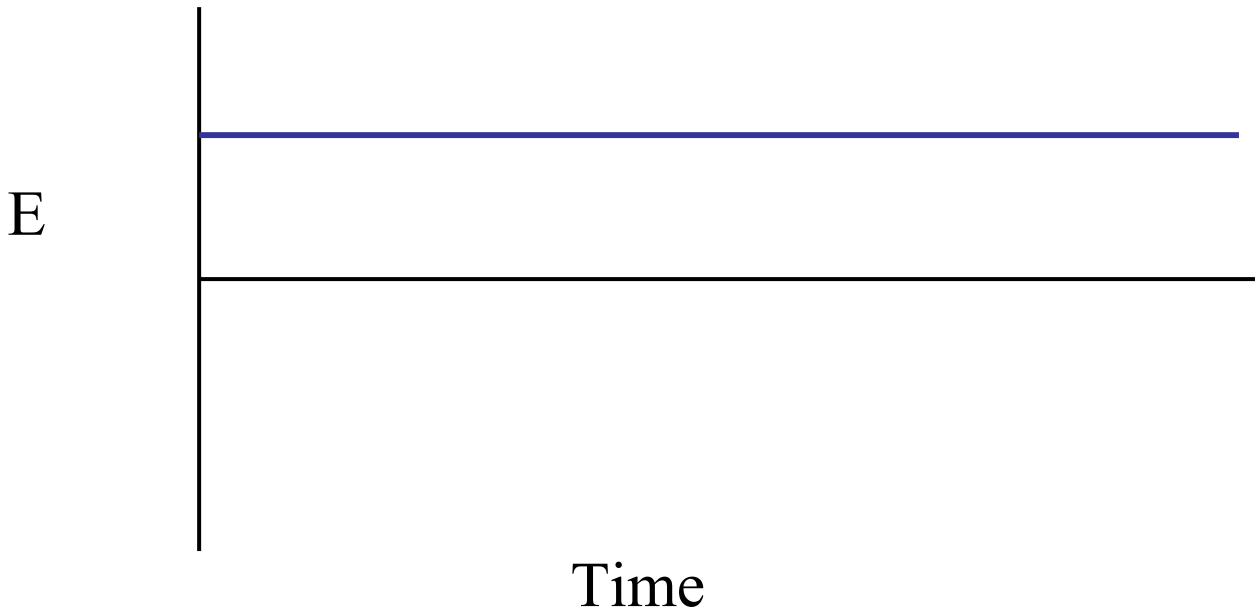

Open circuit potential

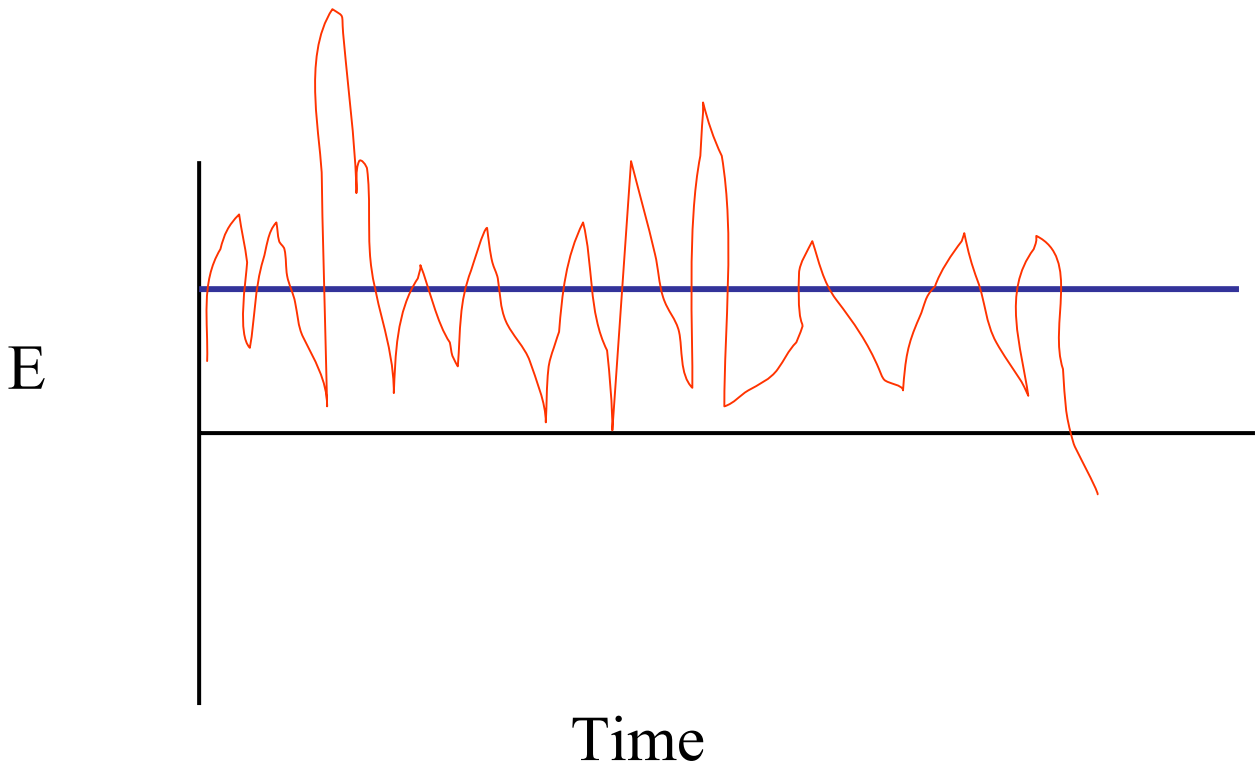

ACRM position

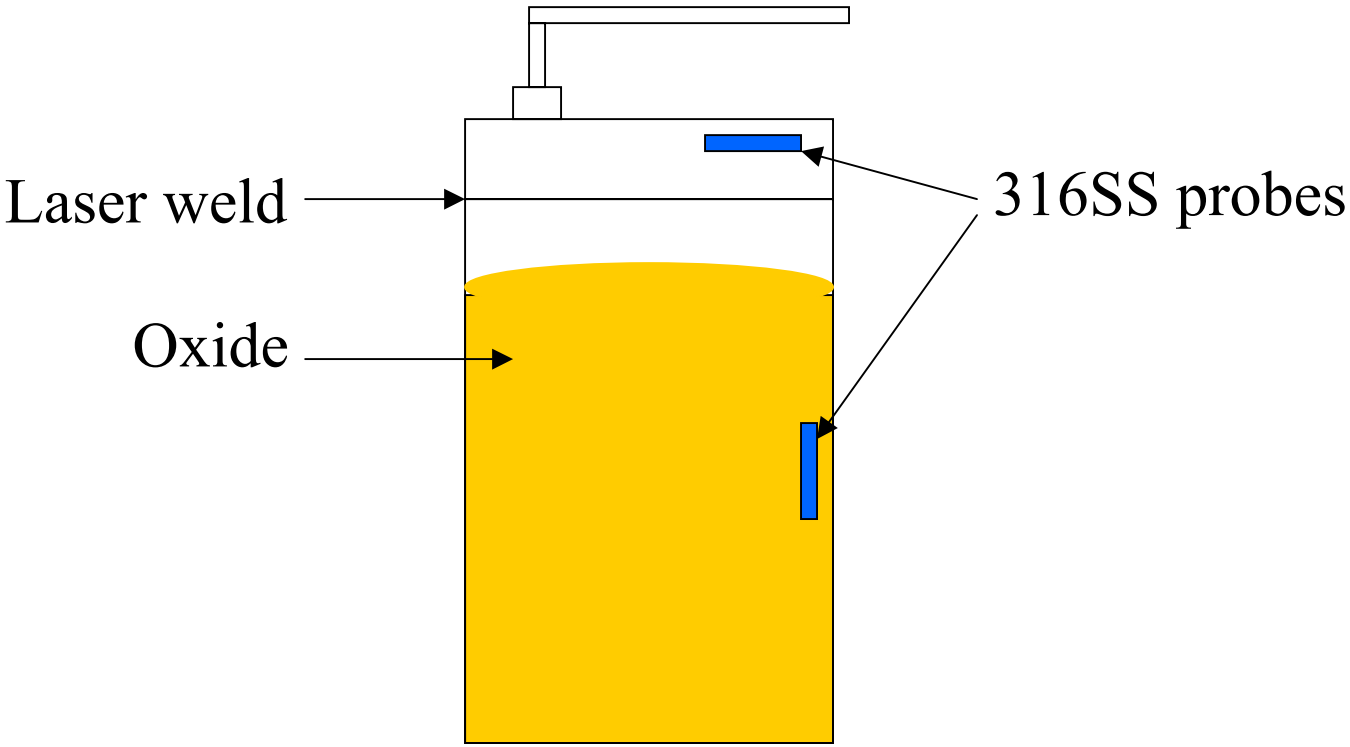

Typical Bode plot for atm probe used in Shelf-Life program. The ACRM is located below the air head-space.

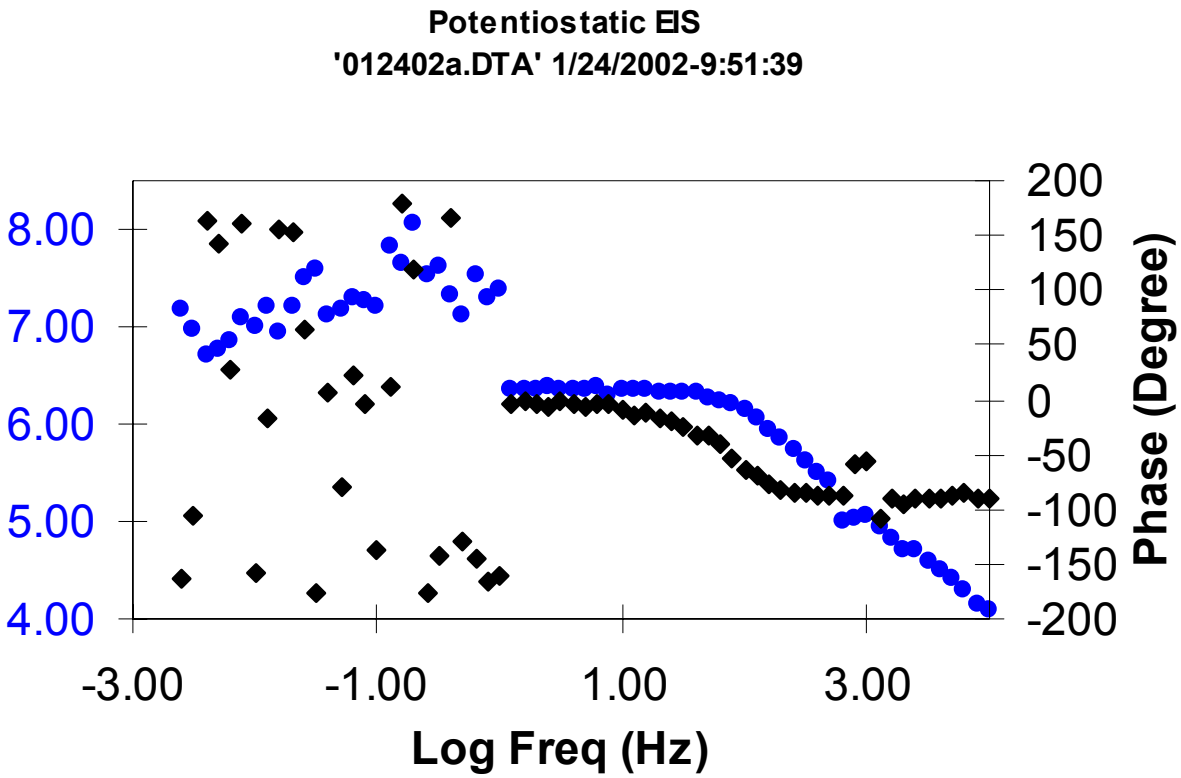
Potentiostatic EIS
'012402a.DTA' 1/24/2002-9:51:39
8.00
7.00
6.00
5.00
4.00
200
150
100
50
0
-50
-100
-150
-200
Phase (Degree)
-3.00
-1.00
1.00
3.00
Log Freq (Hz)

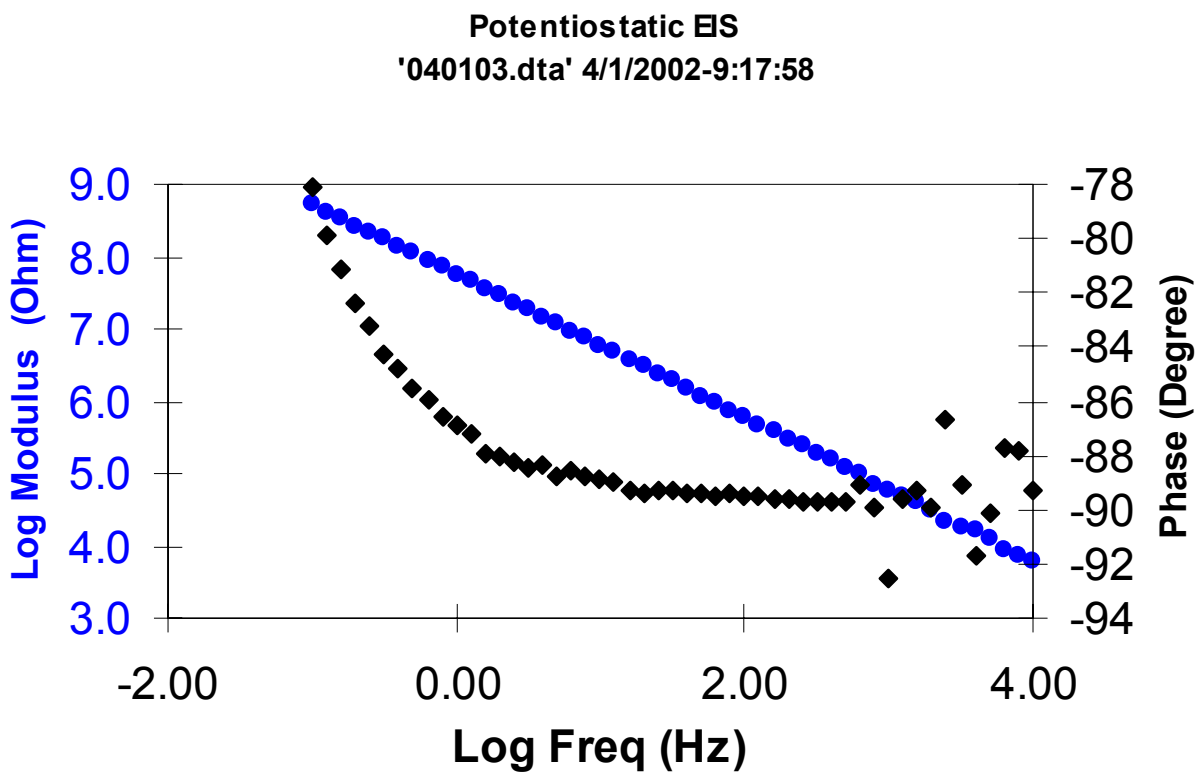
Potentiostatic EIS
'040103.dta' 4/1/2002-9:17:58
Log Modulus (Ohm)
9.0
8.0
7.0
6.0
5.0
4.0
3.0
Phase (Degree)
-78
-80
-82
-84
-86
-88
-90
-92
-94
-2.00
0.00
2.00
4.00
Log Freq (Hz)

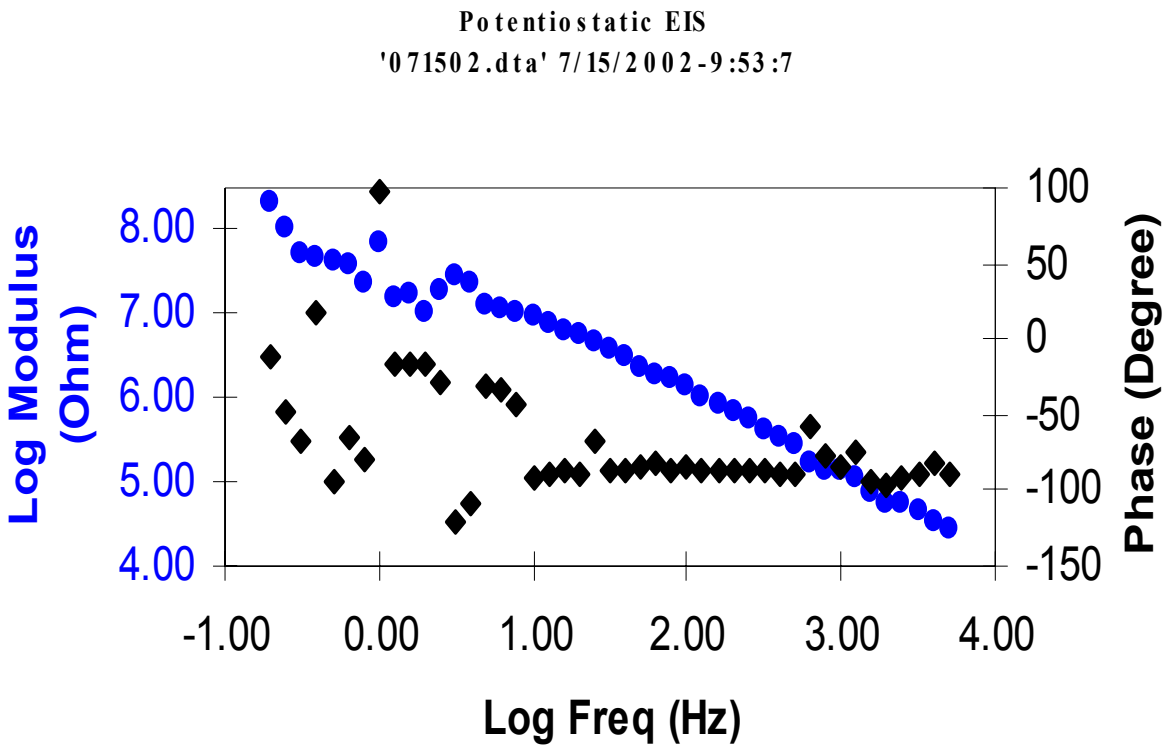
Potentiostatic EIS
'071502.dta' 7/15/2002-9:53:7
Log Modulus (Ohm)
8.00
7.00
6.00
5.00
4.00
100
50
0
-50
-100
-150
Phase (Degree)
-1.00
0.00
1.00
2.00
3.00
4.00
Log Freq (Hz)

Future work

- Fabricate and install ACRM for the remaining cans
- Continue to monitor installed ACRM
- Perform EIS on surrogate materials with ACRM