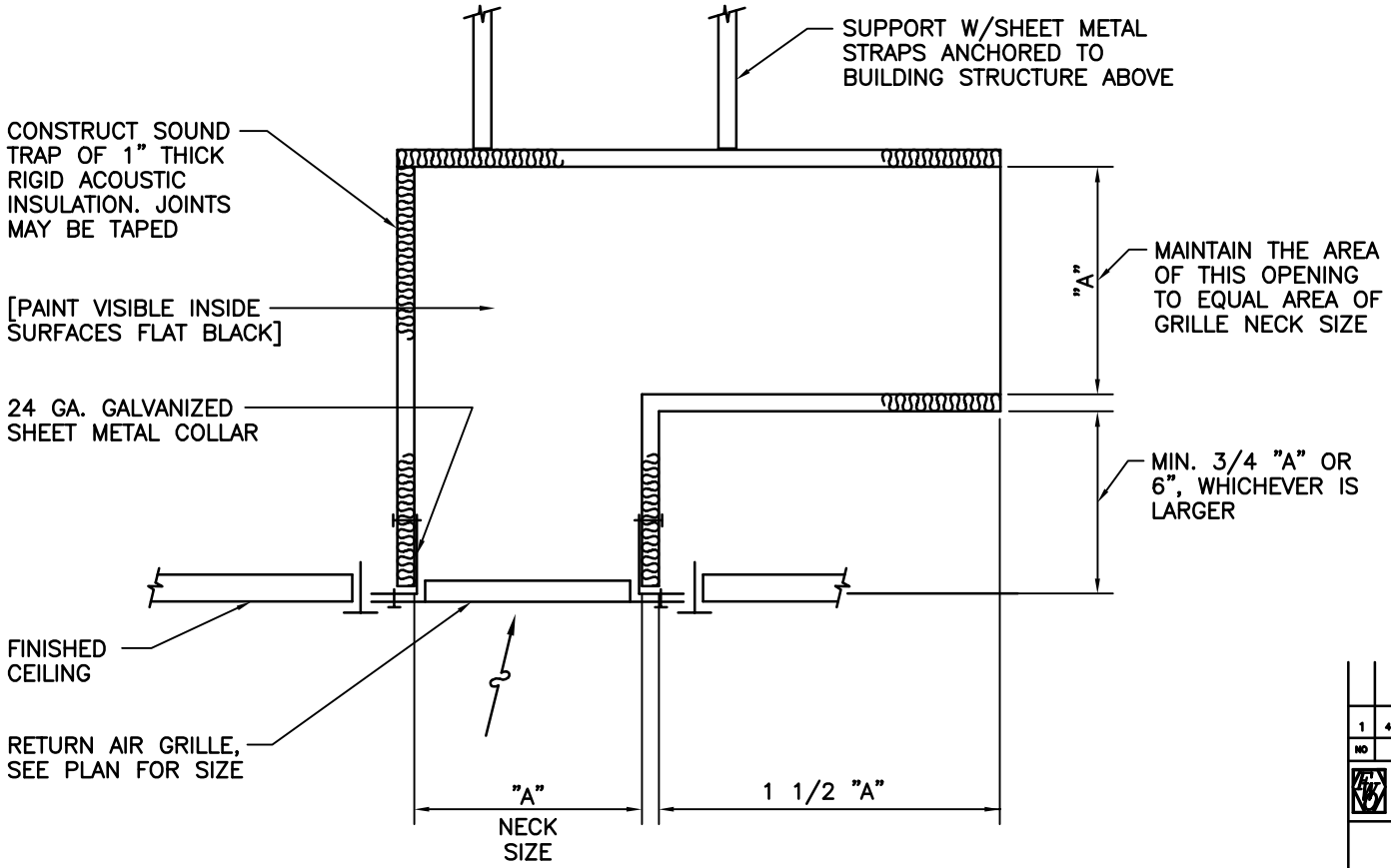

RETURN AIR SOUND TRAP DETAIL

SCALE: NONE

NOTES FOR DESIGNER:

1. PAINT VISIBLE INSIDE SURFACES FLAT BLACK WHERE REFLECTION (DARK ROOMS) OR AESTHETICS IS A CONCERN.

NO	DATE	CLASS REV	DESCRIPTION	DWN	VER	CHKD	SUB	APP
1	4-30-01	U	ADDED NOTE 1 AND REVISED TO COMPLY WITH DRAFTING MANUAL.	RP	KB	RR	TO	TO

FACILITY & WASTE OPERATIONS
SYSTEMS ENGINEERING & MAINTENANCE

LANL ENGINEERING MANUAL

RETURN AIR SOUND TRAP

DRAWN	R.PEARSON
DESIGN	R.ROMERO
CHECKED	K.BECKMAN
DATE	6-28-99

SUBMITTED
DISCIPLINE POC: TOBIN CRUCH

APPROVED FOR RELEASE
STANDARDS MANAGER: TOBIN CRUCH

Los Alamos
Los Alamos National Laboratory
Los Alamos, New Mexico 87545

SHEET 1 OF 1

CLASSIFICATION U
REVIEWER LARRY BAYS
DATE 4-30-01

PROJECT ID	DRAWING NO	REV
CHAPTER 6	ST6710	1