Validation of the ViscoSCRAM Model for PBX 9501

Jobie M. Gerken

Los Alamos National Laboratory
Engineering Sciences & Applications
Engineering Analysis

Introduction

- PBX 9501 - Integral Part of Our Numerical Models
- Need a Continuum Level Model
- Accurately Reproduce Mechanical and Thermal (Ignition) Characteristics

ViscoSCRAM

- Finite Element Model of PBX 9501
  - Mechanical
  - Thermal
- Explicit
  - Bennett, J. G., Haberman, K. S., Johnson, J. N., Asay, B. W., Henson, B. F., (1998), "A Constitutive Model for the Non-Shock Ignition and Mechanical Response of High Explosives," *J. Mech. Phys. Solids*, Vol. 46, pp. 2303-22.
- Implicit
  - Hackett, R. M., Bennett, J. G.,(1999) "An Implicit Finite Element Model for Energetic Particulate Composite Materials," submitted to *Int. J. Num. Meth. Eng.*

ViscoSCRAM - Mechanical

- Visco - Elastic
  - Isotropic, Generalized Maxwell Model
- Continuum Damage
  - Statistical Crack Mechanics (SCRAM)
    - Statistical Dist. of Randomly Oriented Micro Cracks
    - Rate Dependant Crack Growth
    - Crack Face Friction

ViscoSCRAM - Mechanical

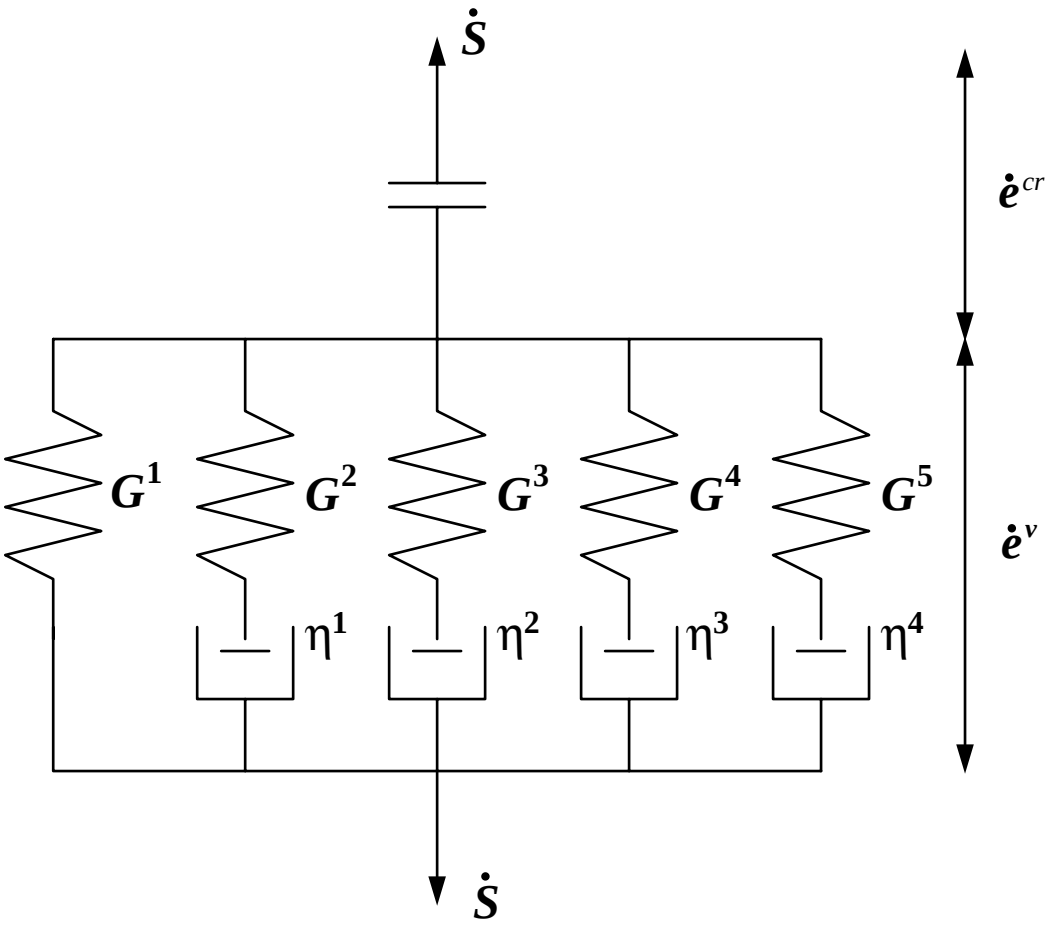

ViscoSCRAM - Thermal

- Bulk Heating
  - Mechanical
    - Viscous
    - Cracking
    - Adiabatic Volume Change
  - Chemical Decomposition
    - Arrennius First Order Chemical Kinetics
  - No Conduction
    - Too Slow Compared to Other Time Scales

ViscoSCRAM - Thermal

- Hotspot Heating
  - Local Regions of Elevated Temperatures
  - Caused by Interaction of Stress Waves with Defects in Material
  - Causes Non-Shock Ignition
  - Frictional Heating Due to Crack Faces Sliding

Validation of ViscoSCRAM

- Ensure Model Reproduces Material Behavior
- Compare with Experimental Results
  - One Dimensional - Mechanical Response
    - Low Rate - D. J. Idar
    - High Rate - G. T. Gray
  - Full Scale
    - Three Point Bend - Mechanical
    - Asay Impact - Mechanical/Ignition
    - Stevens Impact - Mechanical/Ignition

Validation of ViscoSCRAM

- D. J. Idar
  - Low Rate
  - 0.44 /s (Compression)
- G. T. Gray
  - Hopkinson Bar
  - 2000 to 2500 /s (Compression)

Validation of ViscoSCRAM

- Tensile Data
  - Not Much Experimental Information
  - Need Rate Dependent Tensile Failure Data
  - Current Data Show Tensile Failure at ~1/10 the Peak Load of Compressive Failure
- Model
  - Single Finite Element Loaded Uniaxially

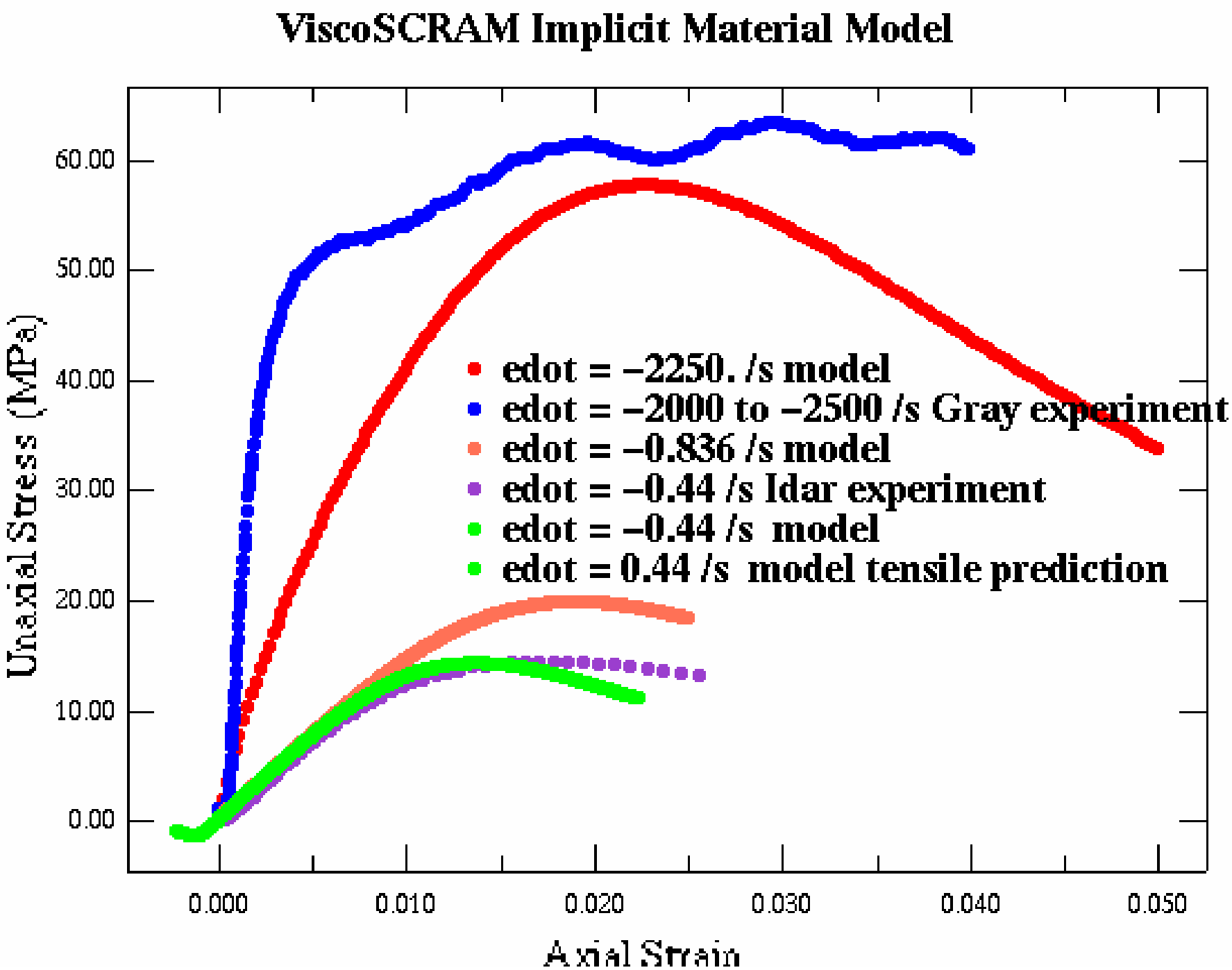
ViscoSCRAM Implicit Material Model
Uniaxial Stress (MPa)
60.00
50.00
40.00
30.00
20.00
10.00
0.00
0.000
0.010
0.020
0.030
0.040
0.050
Axial Strain
edot = −2250. /s model
edot = −2000 to −2500 /s Gray experiment
edot = −0.836 /s model
edot = −0.44 /s Idar experiment
edot = −0.44 /s model
edot = 0.44 /s model tensile prediction

Validation of ViscoSCRAM

- Three Point Bend Experiment
- Slow - Plunger Rate = 0.0212 mm/s

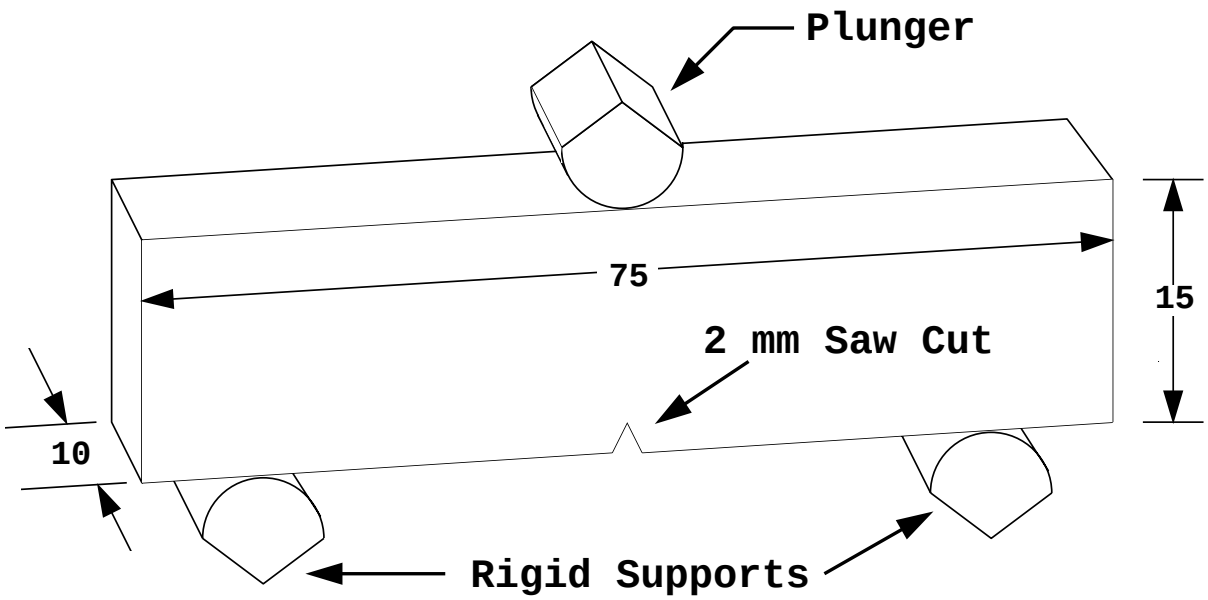

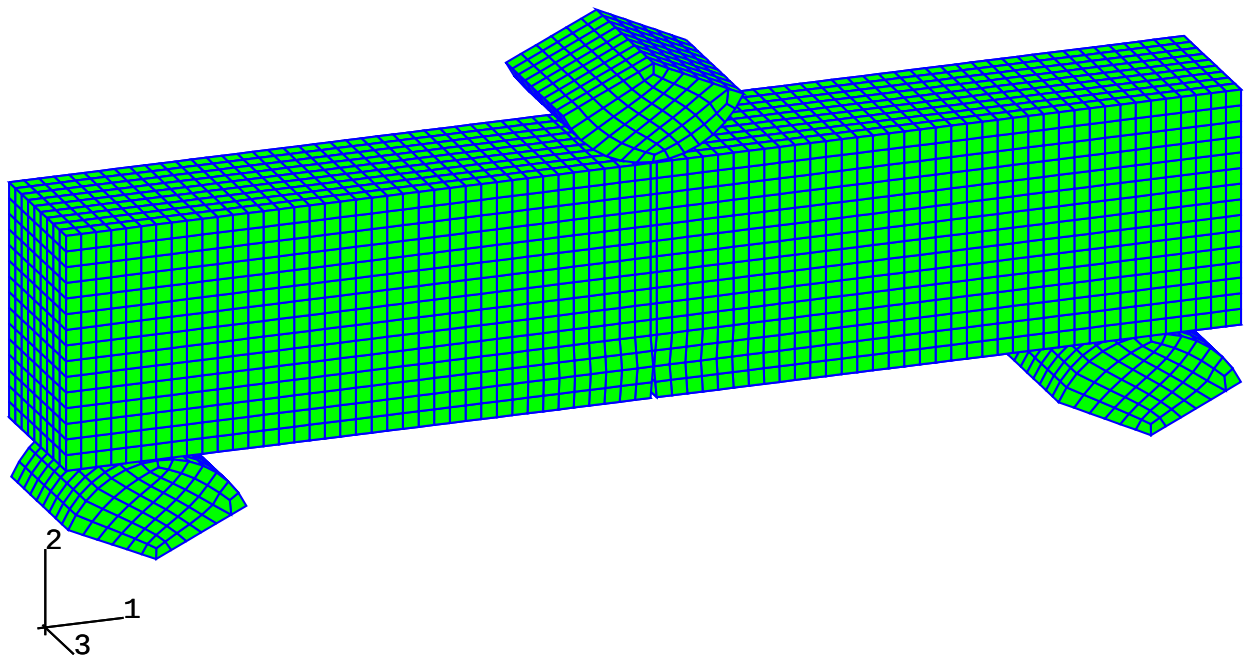
2
1
3

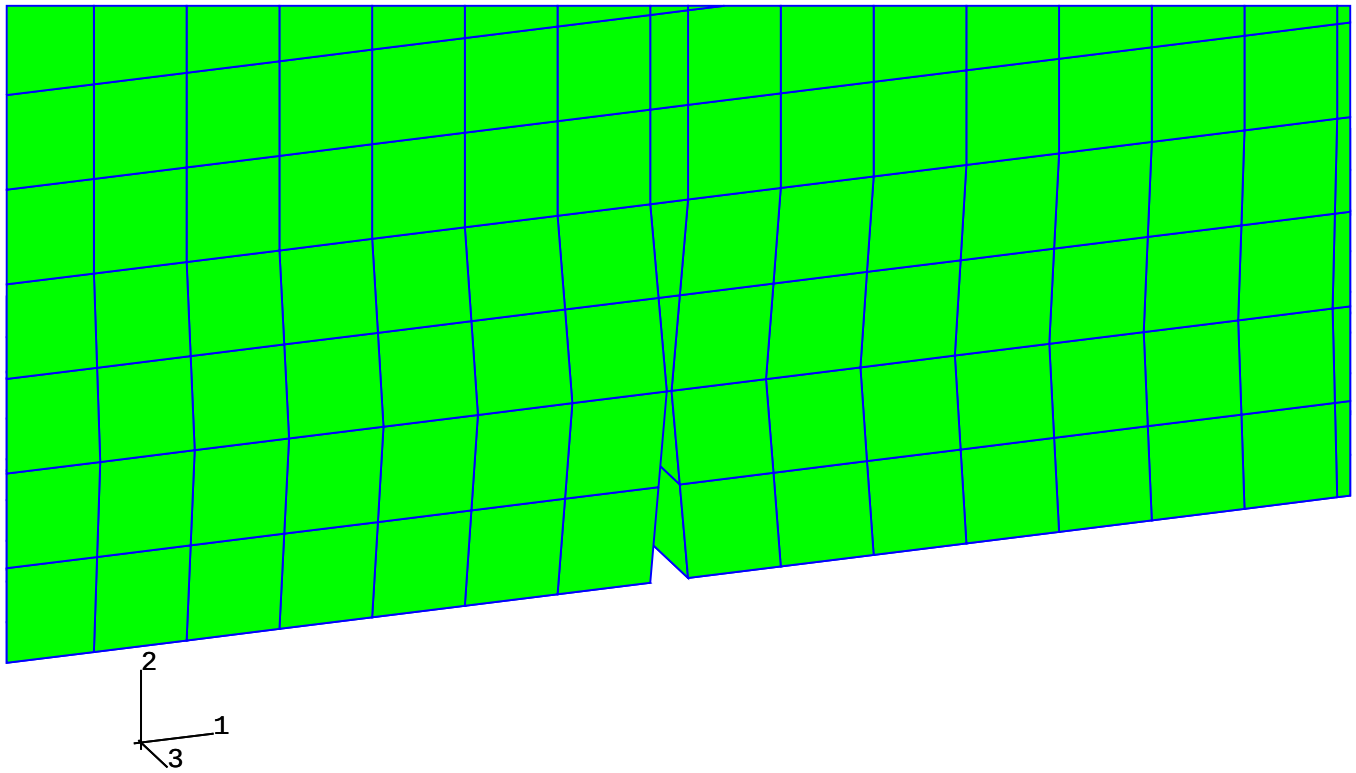
2
1
3

ABAQUS

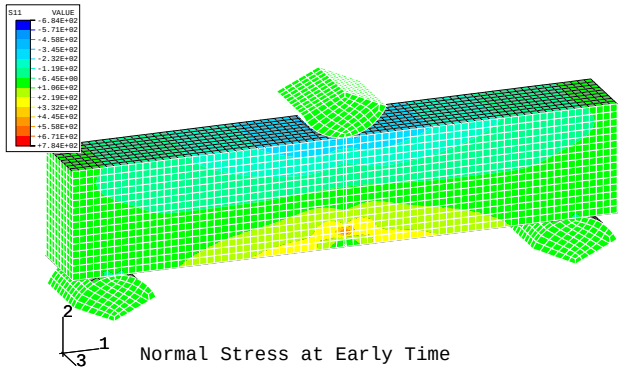

Normal Stress at Early Time

ABAQUS

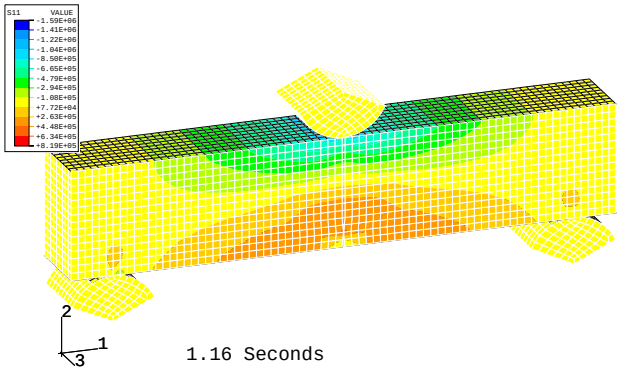

1.16 Seconds

ABAQUS

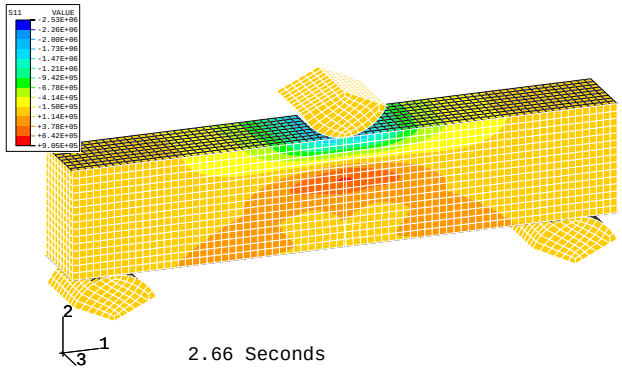

2.66 Seconds

ABAQUS

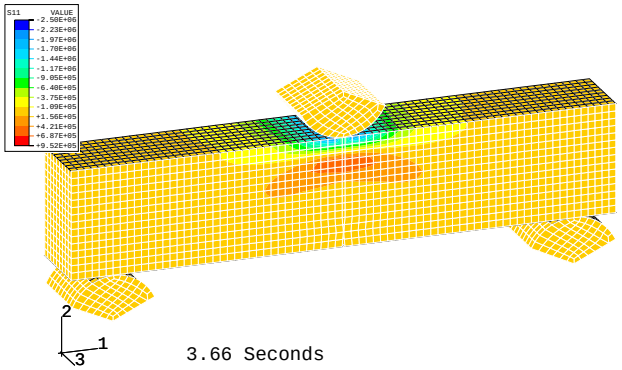

3.66 Seconds

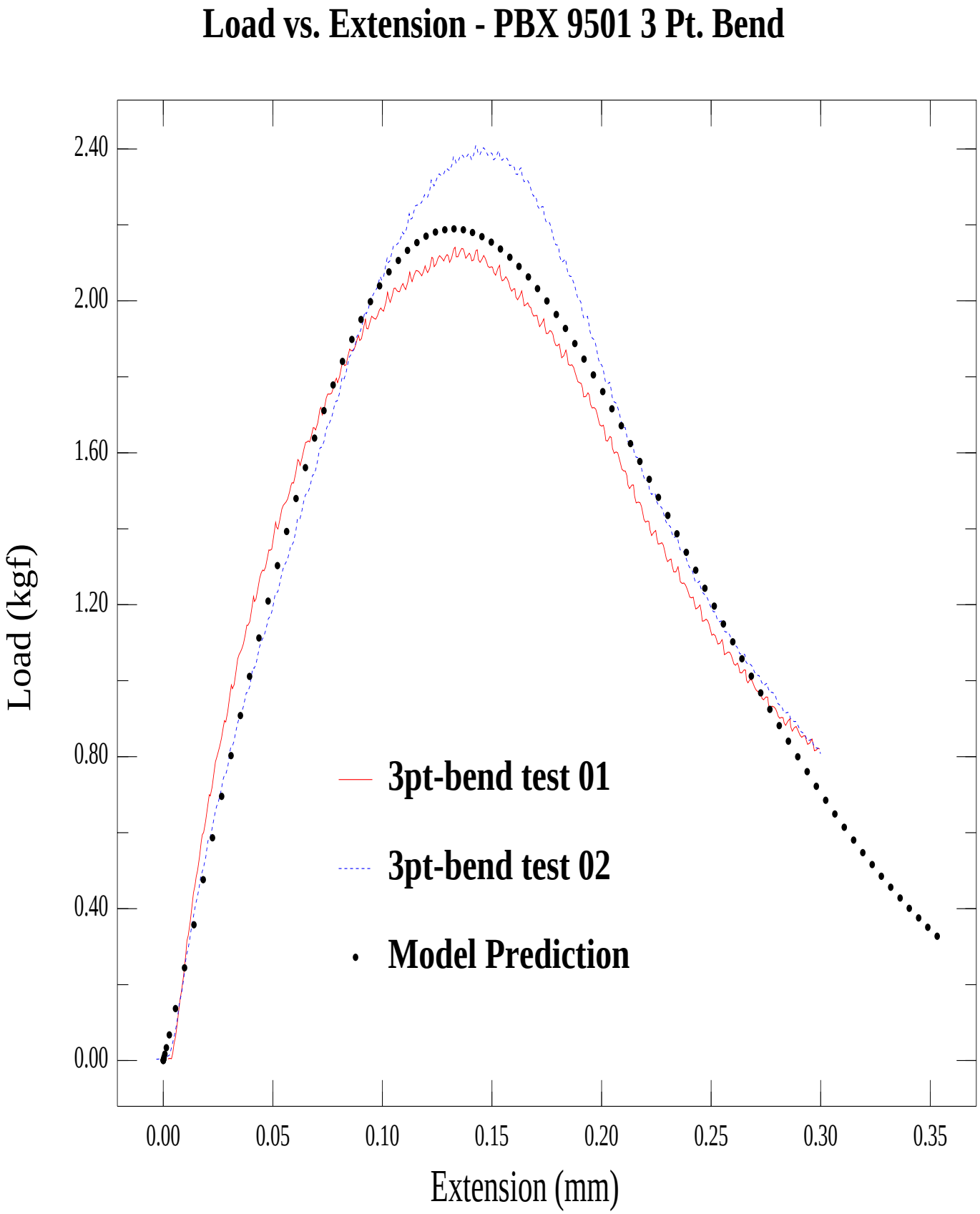
Load vs. Extension - PBX 9501 3 Pt. Bend
Load (kgf)
2.40
2.00
1.60
1.20
0.80
0.40
0.00
0.00
0.05
0.10
0.15
0.20
0.25
0.30
0.35
Extension (mm)
3pt-bend test 01
3pt-bend test 02
Model Prediction

Validation of ViscoSCRAM

- Asay Impact Test
- Range of Strain Rates

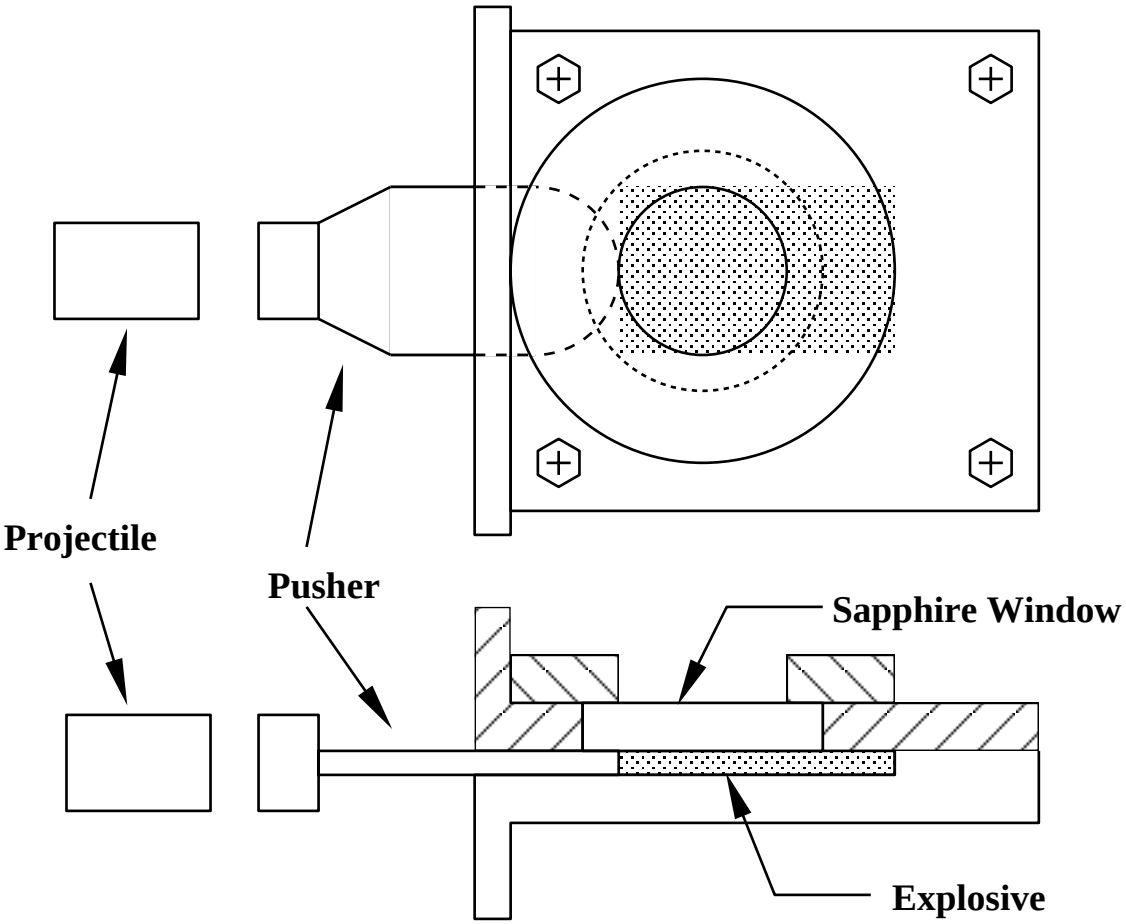

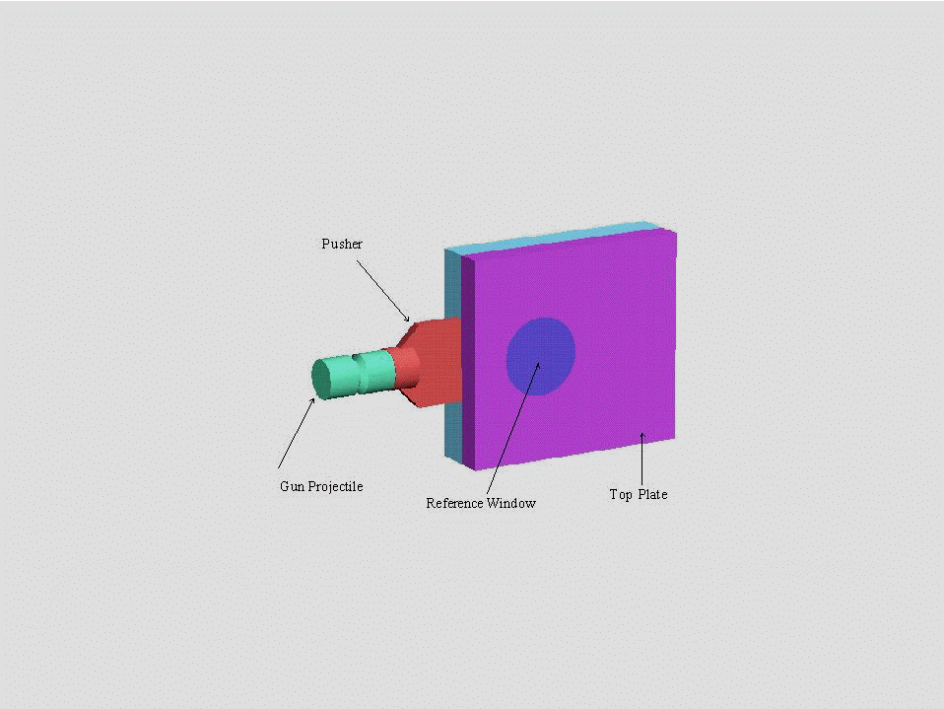

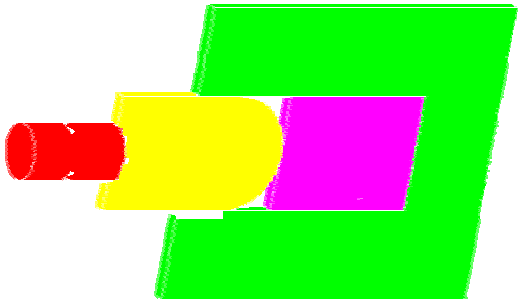

ASAY Impact Test for PBX 9501

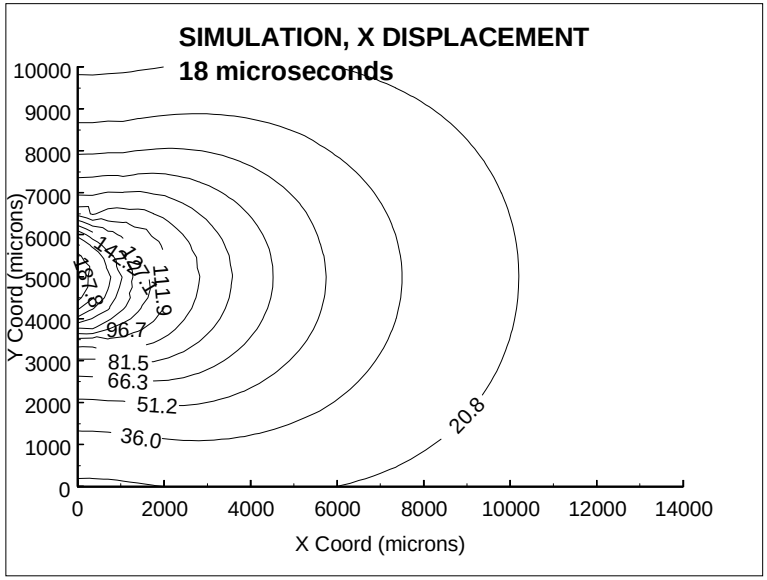

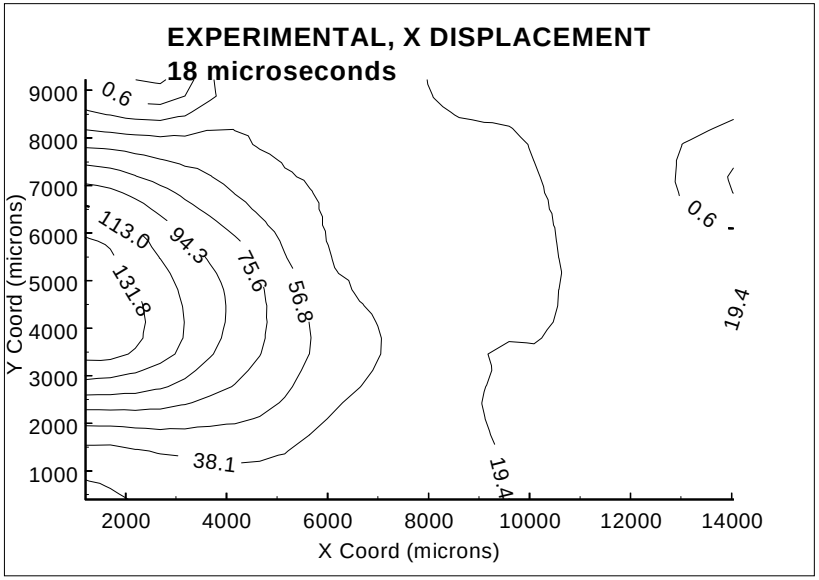

Validation of ViscoSCRAM

- Stevens Impact Test

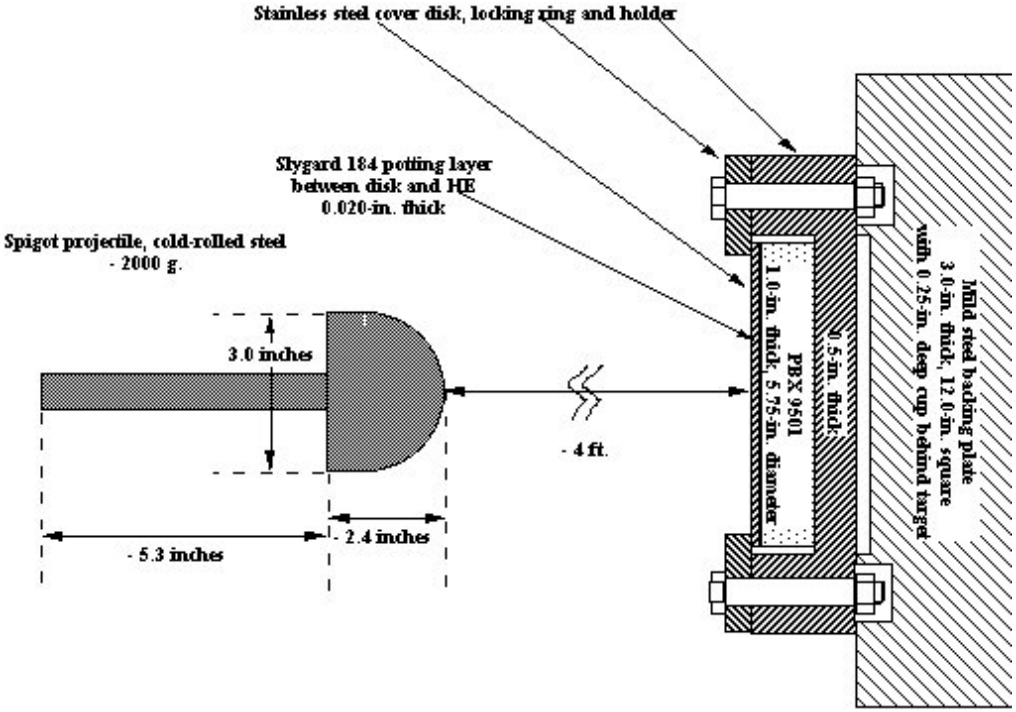

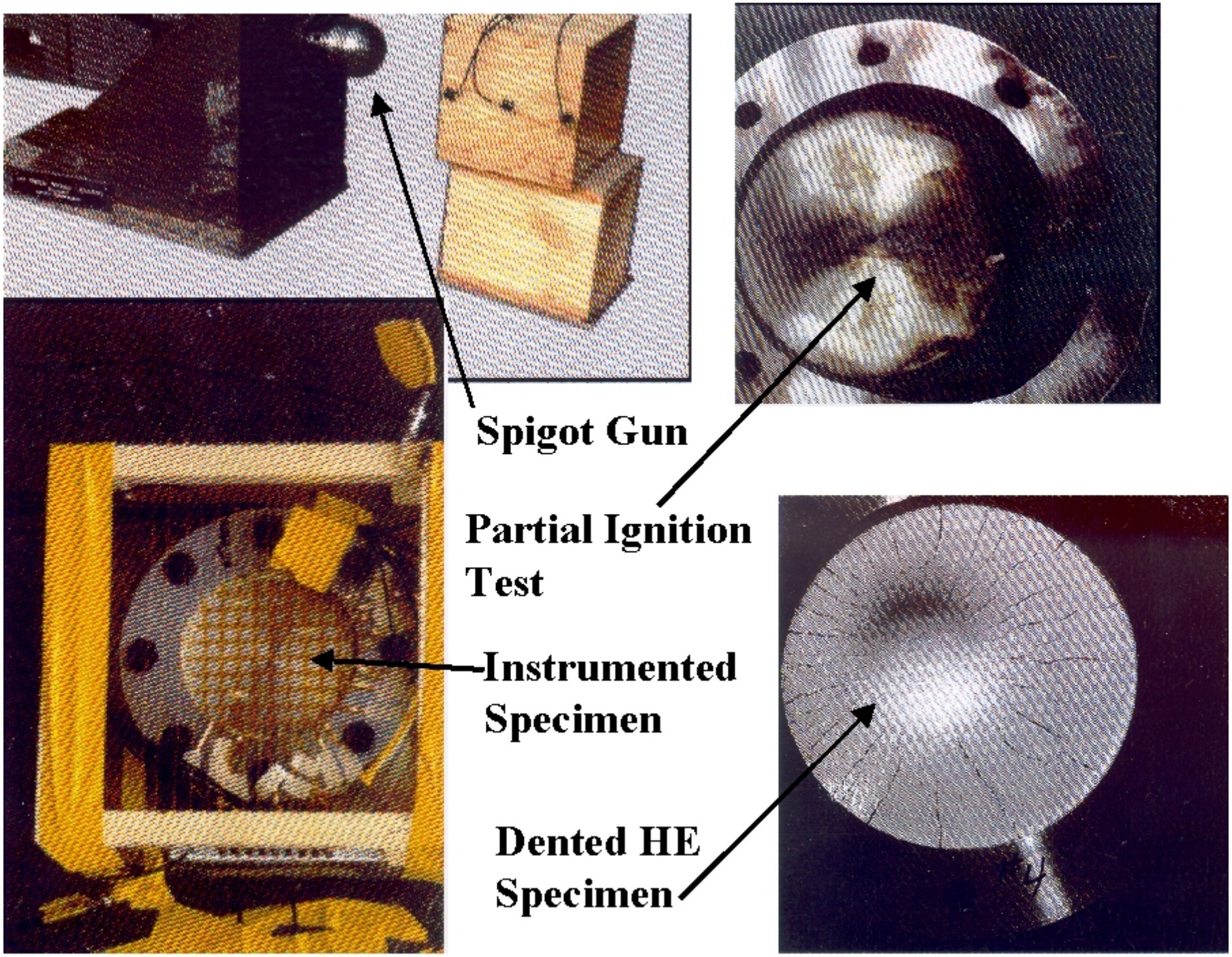
Spigot Gun
Partial Ignition Test
Instrumented Specimen
Dented HE Specimen

PBX 9501 Large, Thick Targets

72.2 m/s < threshold < 75.1 m/s, 1.836 g/cm^3

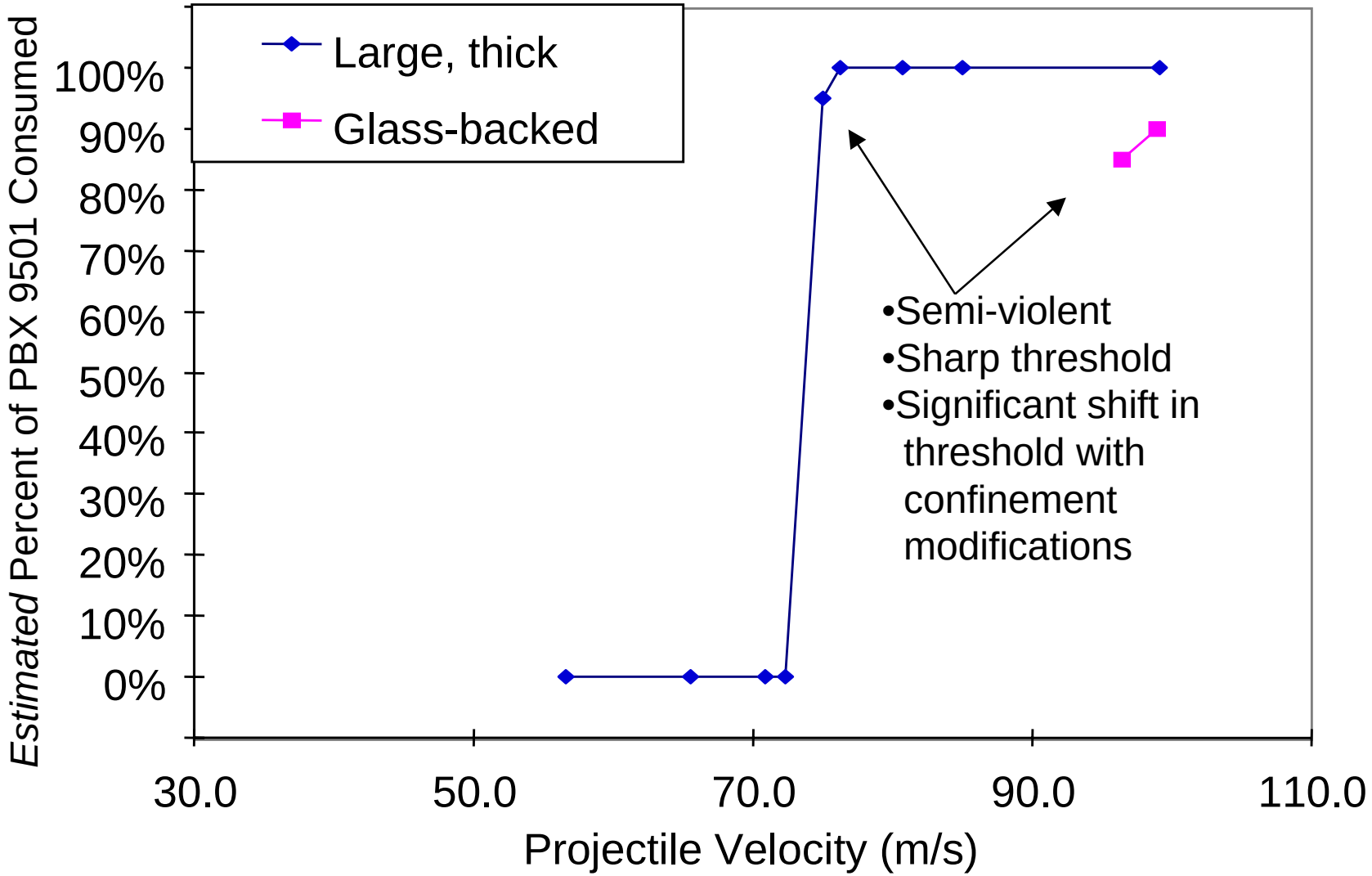

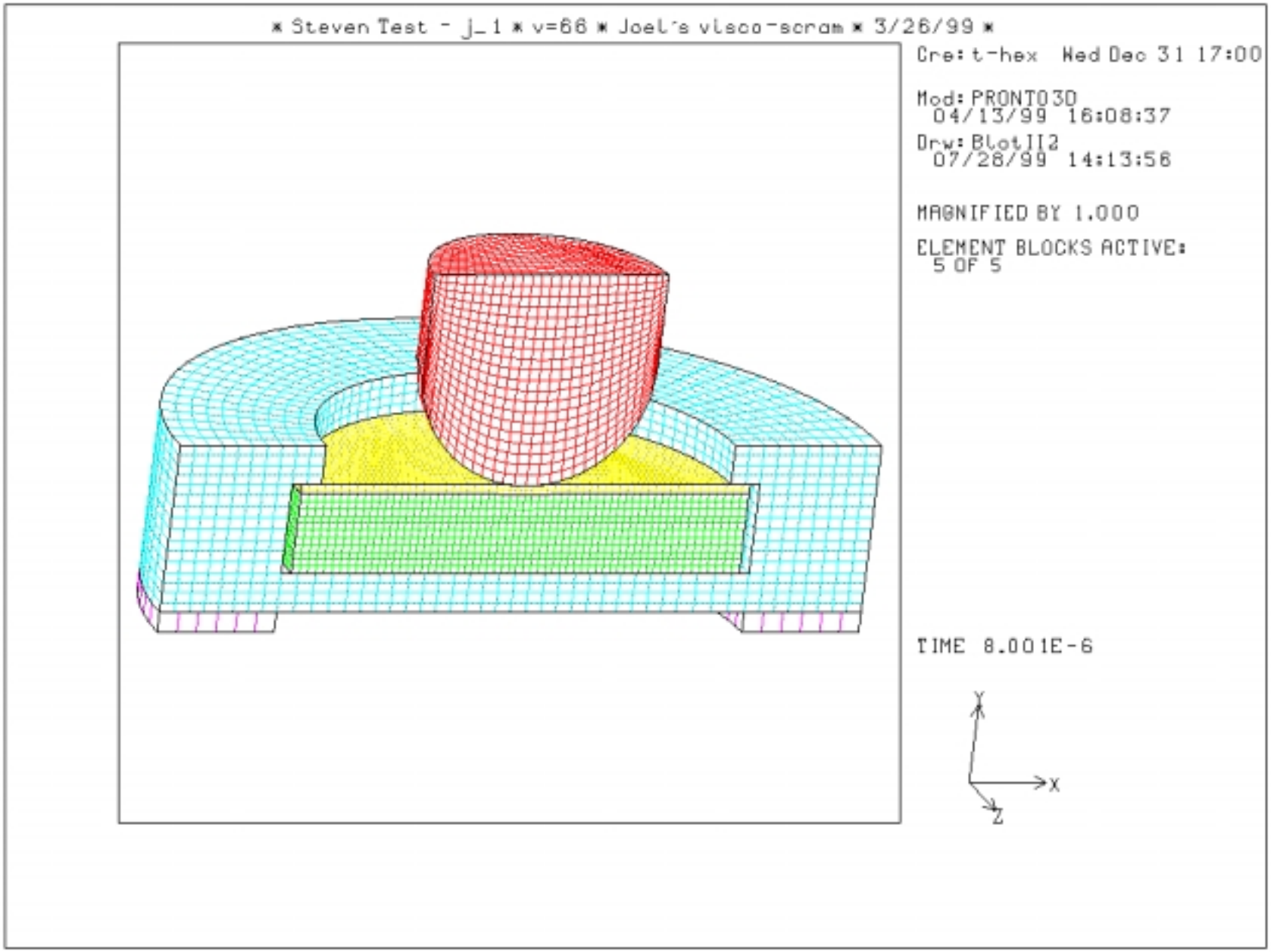

Steven's Test Pronto3d Mesh for Ignition Model Validation Studies

Conclusions

- ViscoSCRAM is Mechanically Validated
- Will Soon be Thermally Validated
  - Hotspot Parameters from Stevens Test Model
- ViscoSCRAM - Production Tool to Model Non-Shock Behavior of PBX 9501
  - ParaDYN
  - PRONTO

  } Explicit
  - ABAQUS/Standard - Implicit