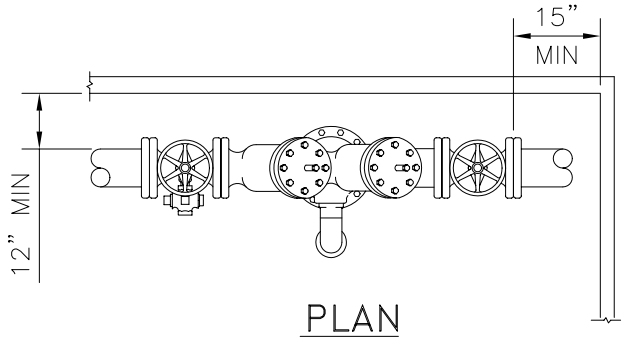

PLAN

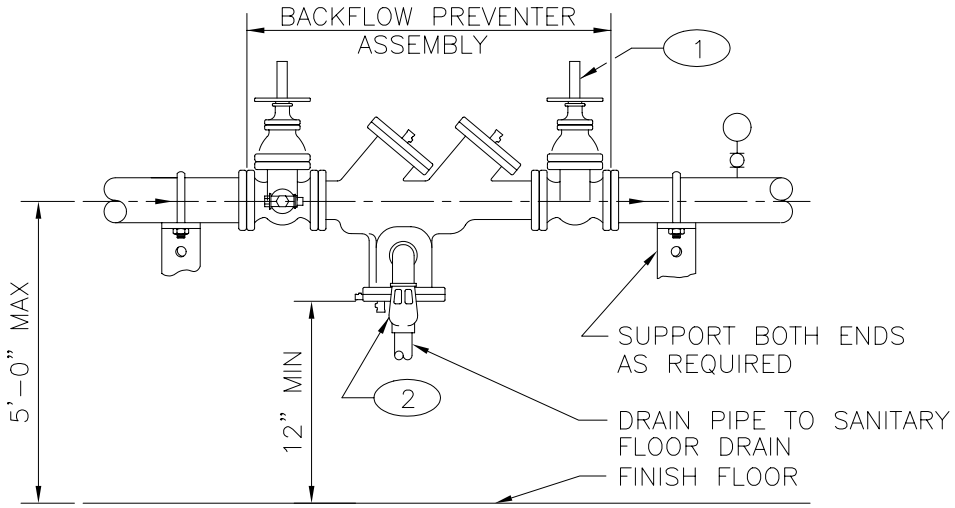

ELEVATION

KEYED NOTES:

1. PROVIDE ADEQUATE CLEARANCE ABOVE UNIT FOR OPERATION OF VALVES OR UNIT REPAIR.
2. AIR GAP FITTING FURNISHED WITH BACKFLOW PREVENTER.

DRAWING DEVELOPED FOR ML-3/ML-4 PROJECTS. FOR ML-1/ML-2, ADDITIONAL REQUIREMENTS AND QA REVIEWS ARE REQUIRED. (REMOVE THIS NOTE WHEN INSERTED INTO A DRAWING PACKAGE).

BACKFLOW PREVENTER DETAIL

SCALE: NONE

NOTES FOR DESIGNER: (DO NOT INCLUDE ON CONSTRUCTION DRAWINGS)

1. SEE SHEET 3

NO	DATE	CLASS REV	DESCRIPTION	DWN	DSGN	CHKD	SUB	APP
2	8-13-03	U	EDITORIAL CHANGES & DWG NO. WAS ST6100.	RP	AY	RR	GG	TO
1	9-6-02	U	REVISED TO COMPLY WITH DRATING MANUAL. DELETED "DIM AND WEIGHT" TABLE, REVISED CLEARANCE DIMENSIONS AND ADDED KEYED NOTES.	RP	AY	GG	GG	TO

FACILITY & WASTE OPERATIONS
DESIGN ENGINEERING CONSTRUCTION SERVICES

ENGINEERING STANDARDS MANUAL

BACKFLOW PREVENTER DETAIL
FLANGED ENDS

BLDG X TA-X

DRAWN	R.PEARSON
DESIGN	R.FROST
CHECKED	G.GREWAL
DATE	6-28-99

SUBMITTED
DISCIPLINE POC: GURINDER GREWAL

APPROVED FOR RELEASE
STANDARDS MANAGER: TOBIN ORUCH

Los Alamos NATIONAL LABORATORY
PO Box 1663
Los Alamos, New Mexico 87545

SHEET 2 OF 3

CLASSIFICATION U
REVIEWER LARRY BAYS
DATE

PROJECT ID CHAPTER 6
DRAWING NO ST-D10-30GEN-1
REV 2

G:\LANL Engineering Standards\Eng. Manual [LEM]\2. Approved\ST-D10-30GEN-1M2r2.dwg, 09/18/03 @ 14:07 093598