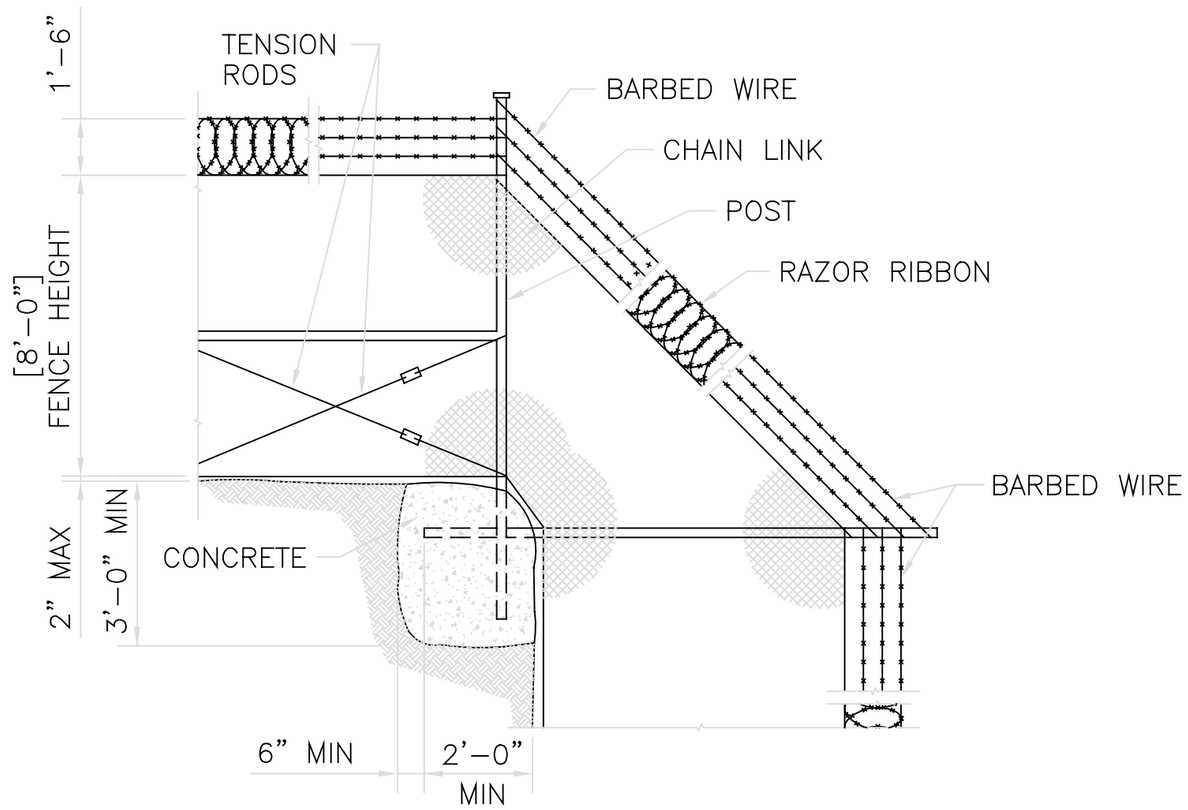

TOP OF EMBANKMENT FENCE DETAIL

SCALE: 1/4"=1'-0"

NOTES FOR DESIGNER:

1. SEE SHEET 1.

NO	DATE	CLASS REV	DESCRIPTION	DWN	VER	CHK
1	4-11-01	U	DELETED CONCRETE SPEC, SHEET 7 OF 9 WAS 7 OF 14, ADDED TEXT "FENCE HEIGHT".	RP	EH	CS

FACILITY & WASTE OPERATIONS
SYSTEMS ENGINEERING & MAINTENANCE

LANL ENGINEERING MANUAL

SECURITY FENCE
TOP OF EMBANKMENT

DRAWN R.
DESIGN E.
CHECKED C.
DATE

SUBMITTED
DISCIPLINE POC: JIM COVEY

APPROVED FOR RELEASE
STANDARDS MANAGER: TOBIN ORUCH

Los Alamos
Los Alamos National Laboratory
Los Alamos, New Mexico 87545

SHEET 7

CLASSIFICATION U
REVIEWER LARRY BAYS
DATE 4-1

PROJECT ID
CHAPTER 3

DRAWING NO
ST3831