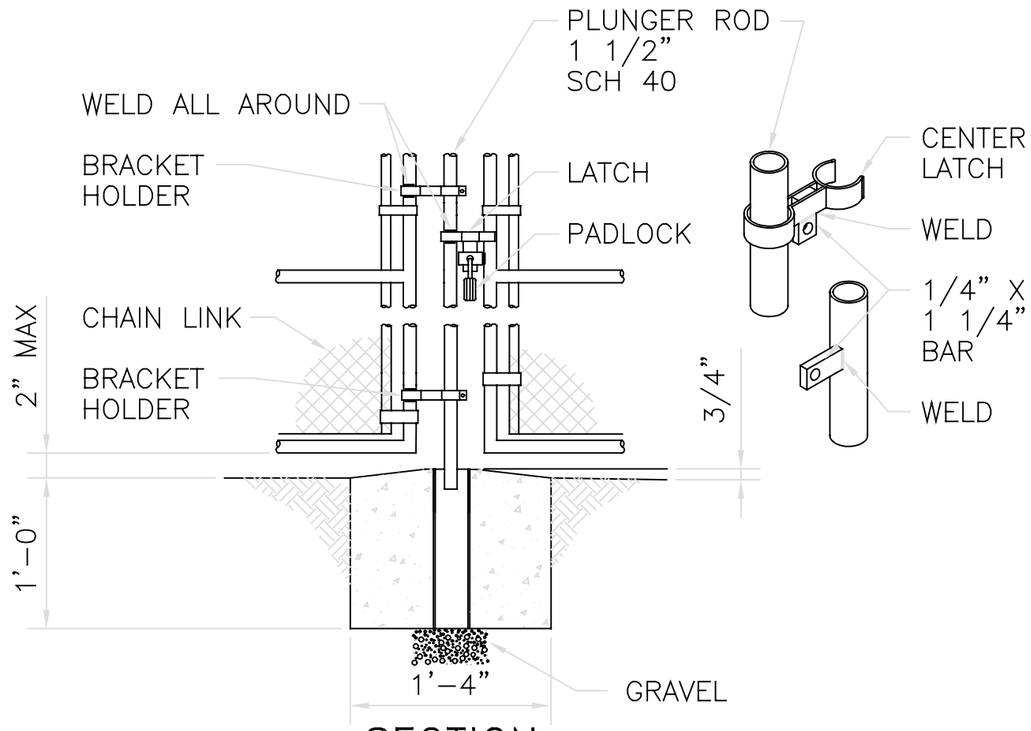

SECTION

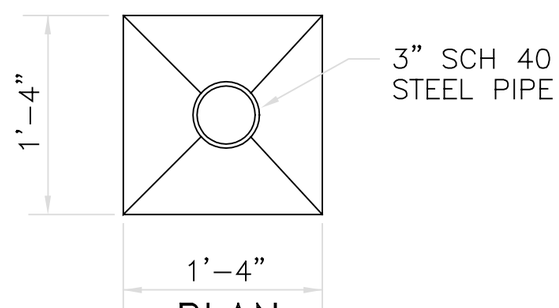

PLAN

GATE LATCHING DETAIL

SCALE: 1"=1'-0"

NOTES FOR DESIGNER:

1. SEE SHEET 1.

NO	DATE	CLASS REV	DESCRIPTION	DWN	VER	CHK
1	4-11-01	U	SHEET 4 OF 9 WAS 4 OF 14. REVISED PLUNGER ROD STOP.	RP	EH	CS

FACILITY & WASTE OPERATIONS
SYSTEMS ENGINEERING & MAINTENANCE

LANL ENGINEERING MANUAL

SECURITY FENCE
GATE LATCHING

DRAWN
DESIGN
CHECKED
DATE

SUBMITTED
DISCIPLINE POC: JIM COVEY

APPROVED FOR RELEASE
STANDARDS MANAGER: TOBIN ORUCH

Los Alamos
Los Alamos National Laboratory
Los Alamos, New Mexico 87545

SHEET 4

CLASSIFICATION U
REVIEWER LARRY BAYS
DATE 4-1

PROJECT ID
CHAPTER 3

DRAWING NO
ST3831