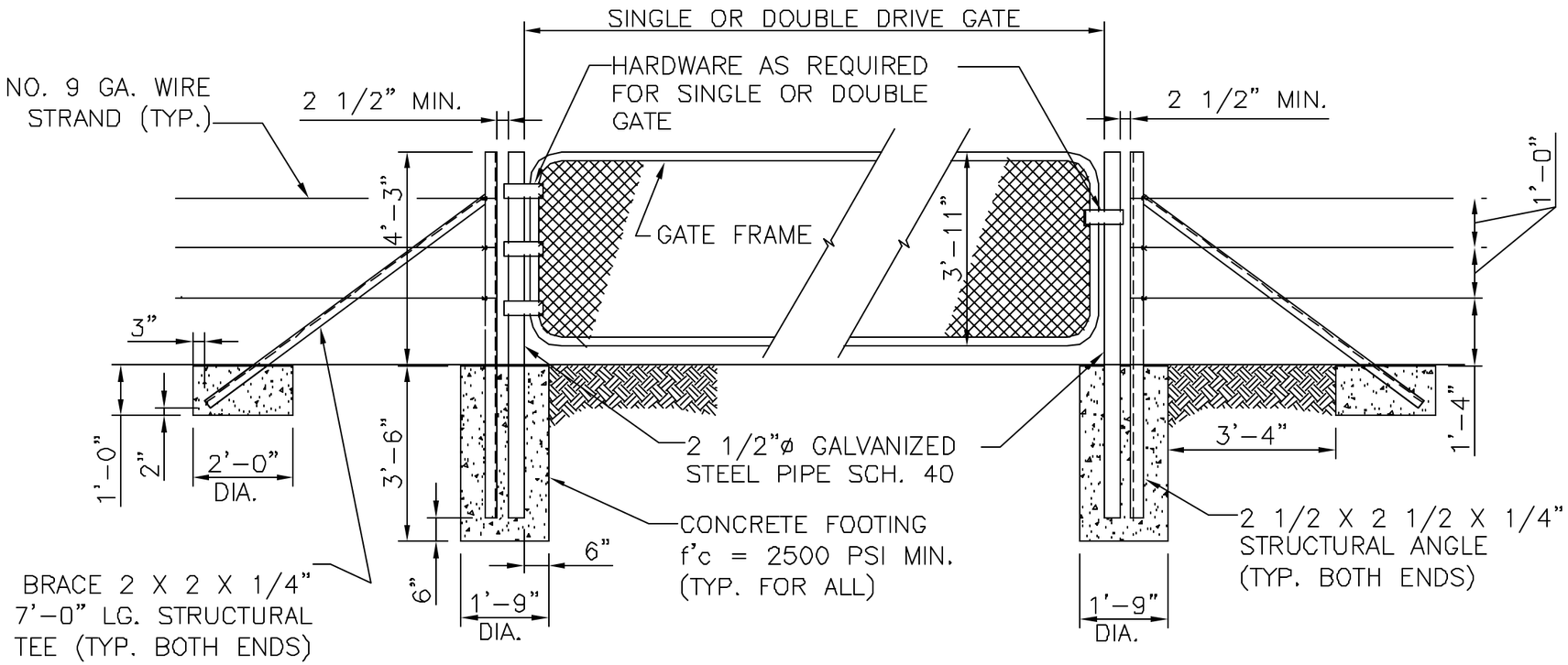

TYPICAL GATE DETAIL

SCALE: 3/8"=1'-0"

NO	DATE	CLASS REV	DESCRIPTION	DWN	VER	CHKD	SUB	APP

FACILITY & WASTE OPERATIONS
SYSTEMS ENGINEERING & MAINTENANCE

LANL ENGINEERING MANUAL

FENCE – SMOOTH STRAND
SINGLE OR DOUBLE GATE

DRAWN	R.G.MARTINEZ
DESIGN	R.G.MARTINEZ
CHECKED	T.ORUCH
DATE	10-10-02

SUBMITTED
DISCIPLINE PDC: ED HOTH

APPROVED FOR RELEASE
STANDARDS MANAGER: TOBIN ORUCH

Los Alamos
Los Alamos National Laboratory
Los Alamos, New Mexico 87545

SHEET 2 OF 2

CLASSIFICATION U
REVIEWER LARRY BAYS
DATE 10-10-02

PROJECT ID	DRAWING NO	REV
CHAPTER 3	ST-G2040-2	0