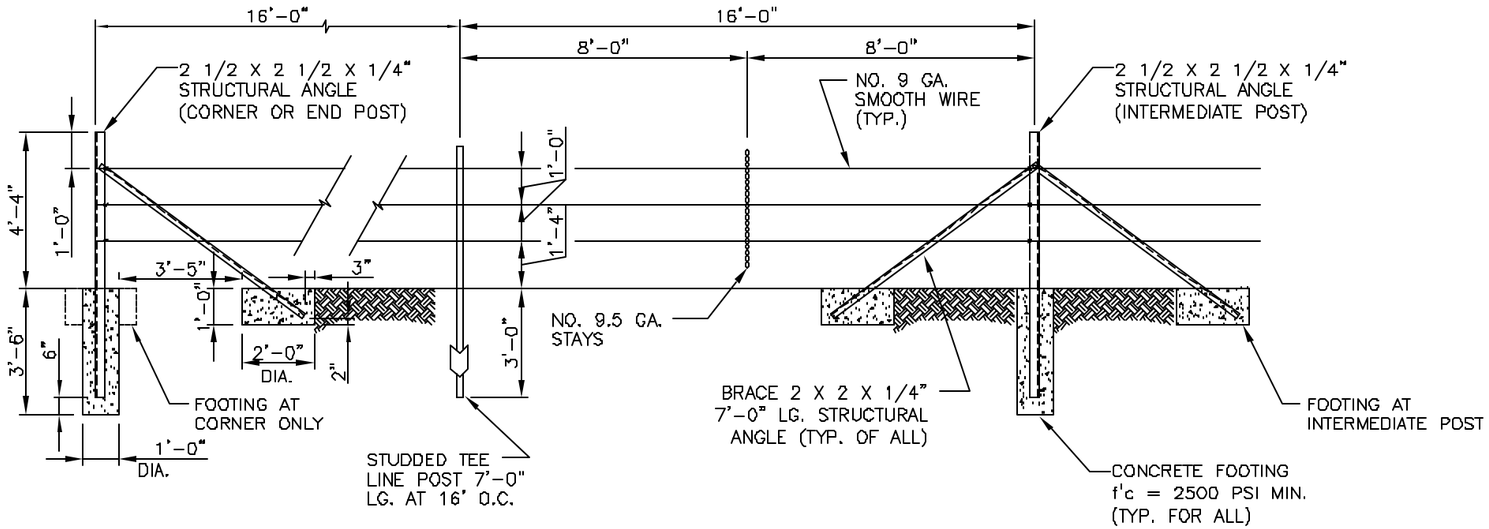

TYPICAL FENCE DETAIL

SCALE: 1/4"=1'-0"

DESIGNER NOTES:

1. COORDINATE WITH LANL CONSTRUCTION SPEC SECTION 02445, WIRE FENCING.
2. IF ALLOWED BY RRES-ECO VIA STANDARDS CIVIL POC, 12 1/2 GA. BARBED WIRE CAN BE SUBSTITUTED.
3. IF DESIRED, 4 STRANDS CAN BE SUBSTITUTED WITHOUT POC APPROVAL. SHOW BOTTOM STRAND AT 12 INCHES EL. AND 12 INCH SPACING THEREAFTER.

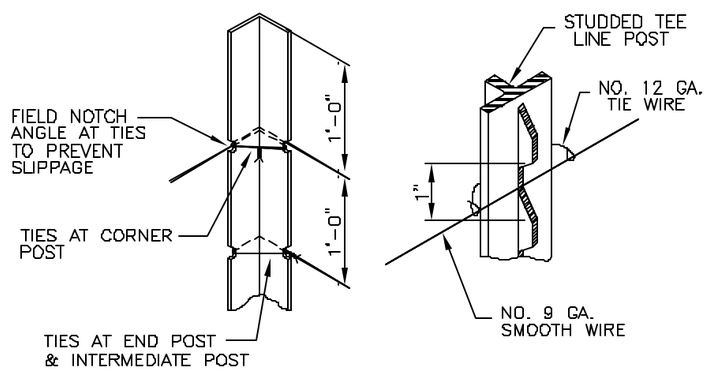

TYPICAL WIRE TIE DETAIL

SCALE: NONE

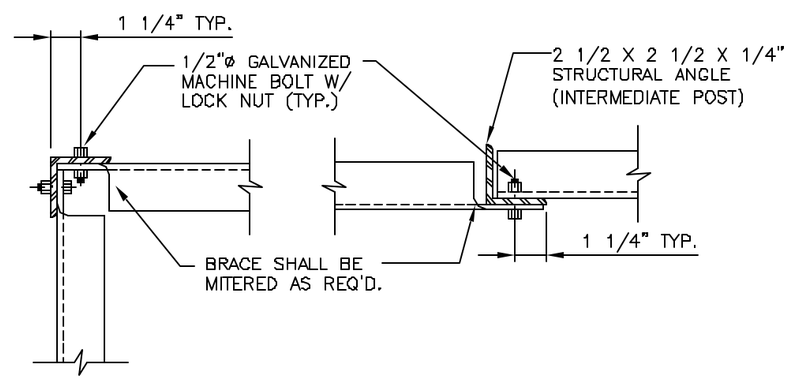

TYPICAL BRACE CONNECTION DETAIL

SCALE: NONE

NO	DATE	CLASS REV	DESCRIPTION	DWN	VER	CHKD	SUB	APP

FACILITY & WASTE OPERATIONS
SYSTEMS ENGINEERING & MAINTENANCE

LANL ENGINEERING MANUAL

FENCE – SMOOTH 3-STRAND
DETAILS

DRAWN	R.G.MARTINEZ
DESIGN	R.G.MARTINEZ
CHECKED	T.ORUCH
DATE	10-10-02

SUBMITTED
DISCIPLINE POC: ED HOTH

APPROVED FOR RELEASE
STANDARDS MANAGER: TOBIN ORUCH

Los Alamos
Los Alamos National Laboratory
Los Alamos, New Mexico 87545

SHEET 1 OF 2

CLASSIFICATION U
REVIEWER LARRY BAYS
DATE 10-10-02

PROJECT ID	DRAWING NO	REV
CHAPTER 3	ST-G2040-2	0