SBN Progress – May 2016

Robert Cooper, William Louis, Geoff Mills, Richard Van de Water

I. SBND Photon Detection System Design

The current design of the SBND Photon Detection System (PDS) has 120 TPB-coated Hamamatsu R5912 8" phototubes (PMTs). The PMTs will be grouped in 24 modules with 5 PMTs per module. An optional design is being considered with 24 additional uncoated PMTs (1 additional PMT per module). The additional uncoated PMTs would only be sensitive to visible light, which would be in contrast to the TPB-coated PMTs that are sensitive to both visible light and UV light. Figure 1 is a schematic drawing of the PDS support structure, showing some of the modules on one side of the TPC. Each module has 6 PMTs, with the upper-middle PMT being uncoated. Each PMT will have the photocathode at ground potential with 1 cable per PMT for both HV and signal readout. The 144 total cables will go through 2 cable ports, corresponding to 72 cables per port, as shown in Figure 2. As shown in Figure 3, the PMTs will also have hoods to protect the TPB coatings, and the hoods will be removed prior to installation in the cryostat.

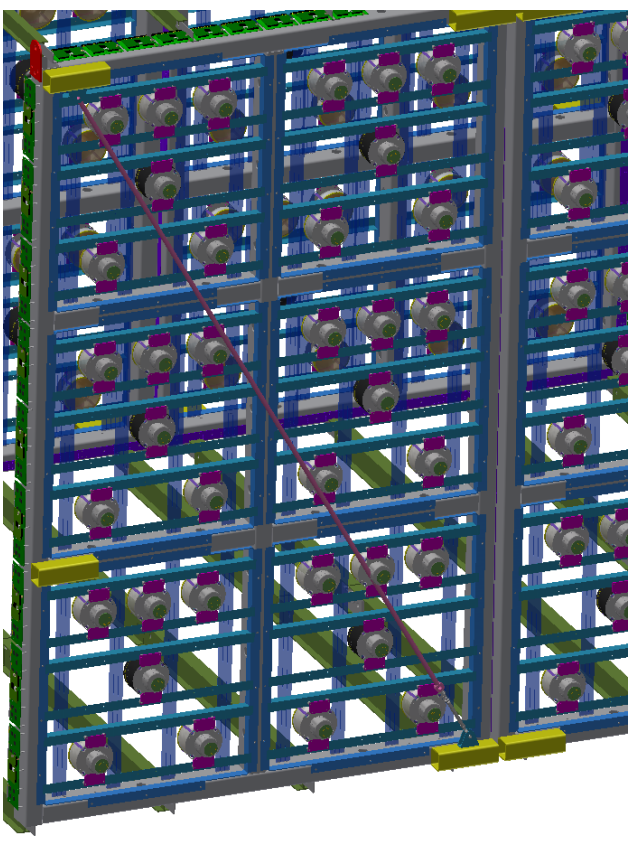

Figure 1: A schematic drawing of the PDS support structure, showing a revised design with 6 PMTs per module. The upper-middle PMT in each module is uncoated, while the other PMTs have TPB coating.

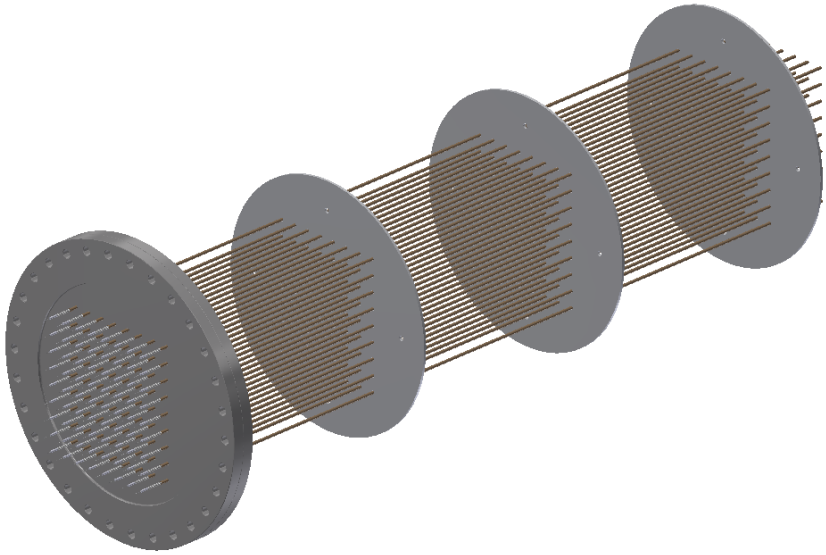

Figure 2: A schematic drawing of a cable port with 72 cables.

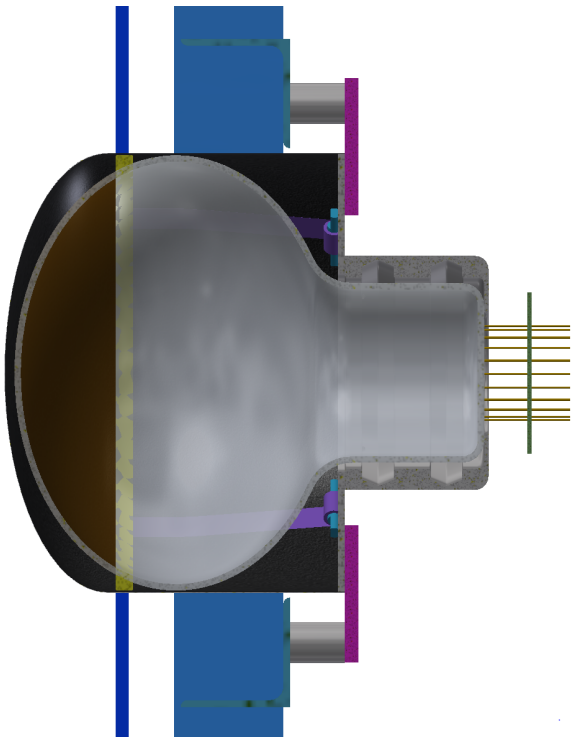

Figure 3: A schematic drawing of an individual PMT with a hood mounted to protect the TPB coating.

II. SBND PDS PMTs and Electronics

A total of 135 Hamamatsu 10-stage R5912 8" PMTs have been ordered and will arrive this summer. Also, 10 CAEN V1730 digitizer boards have been ordered, together with ePCI readout, trigger board, crate, and HV system. The V1730 digitizer

boards have 16 channels per board and operate at 500 MHz with 14 bit optical readout. The 14 bit ADCs will provide 5 bits for a single photoelectron and a dynamic range of approximately 512 photoelectrons. The electronics will have fiber optic readout (80 Mbit/s) and a 64 MHz external clock.

III. MiniCAPTAIN Engineering Run

The MiniCAPTAIN detector had an initial engineering run in a WNR neutron beamline at LANL. The MiniCAPTAIN detector, as shown in Figure 4, is a LAr hexagonal TPC with 400 kg of LAr, 30 cm drift, and 3 mm pitch wires. There are a total of 1000 TPC channels and 16 1" PMTs for scintillation light detection. Figure 5 shows the scintillation light output versus neutron energy, which is determined from TOF, while Figure 6 shows a plot of the MiniCAPTAIN triplet scintillation light lifetime versus calendar time. The lifetime improved as the O_2 impurity decreased from 30 ppb to 1 ppb.

Figure 4: A photograph of the MiniCAPTAIN detector in a WNR neutron beamline at LANL.

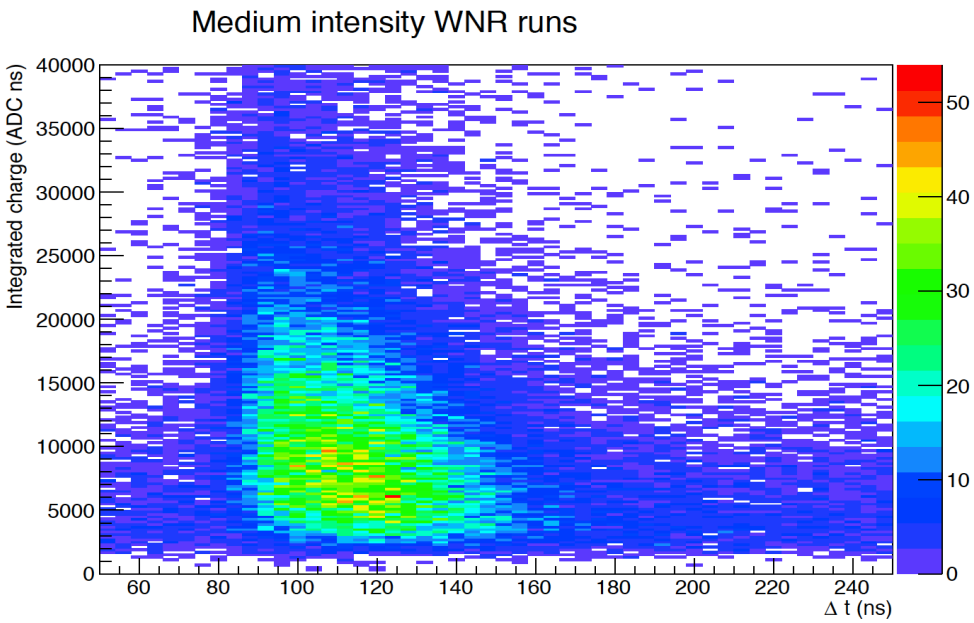

Figure 5: A plot of MiniCAPTAIN scintillation light output versus neutron energy, which is determined from TOF.

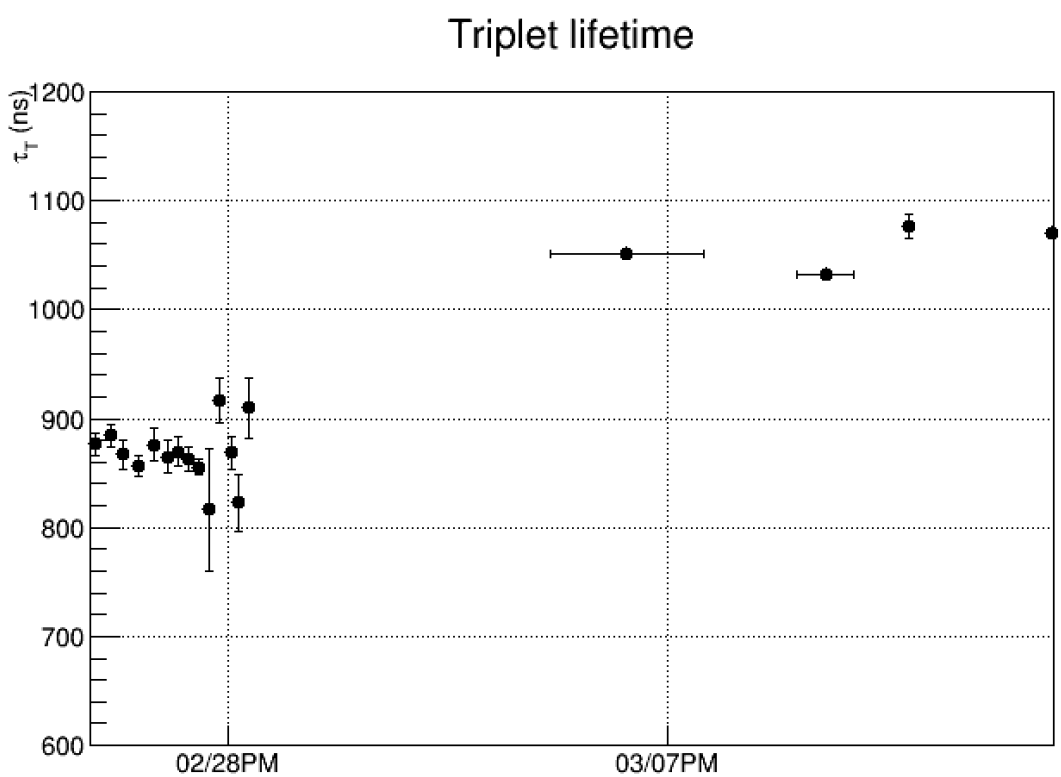

Figure 6: A plot of the MiniCAPTAIN triplet scintillation light lifetime versus calendar time. The lifetime improved as the O_2 impurity decreased from 30 ppb to 1 ppb.