Active Sensing for Damage Identification

Various aspects of active sensing techniques including a new sensing network paradigm, wireless telemetry, and power harvesting are being investigated for Stuctural Health Monitoring applications.

www.lanl.gov/damage_id

Contact:

Gyuhae Park
gpark@lanl.gov

Bill Hodgkiss
whodgkiss@ucsd.edu

Los Alamos NATIONAL LABORATORY EST. 1943

UCSD Jacobs | School of Engineering

Approved for unlimited, public release. LA-UR-04-8818

A Hybrid, Hierarchal Sensing Network and its Devices Developed by LANL

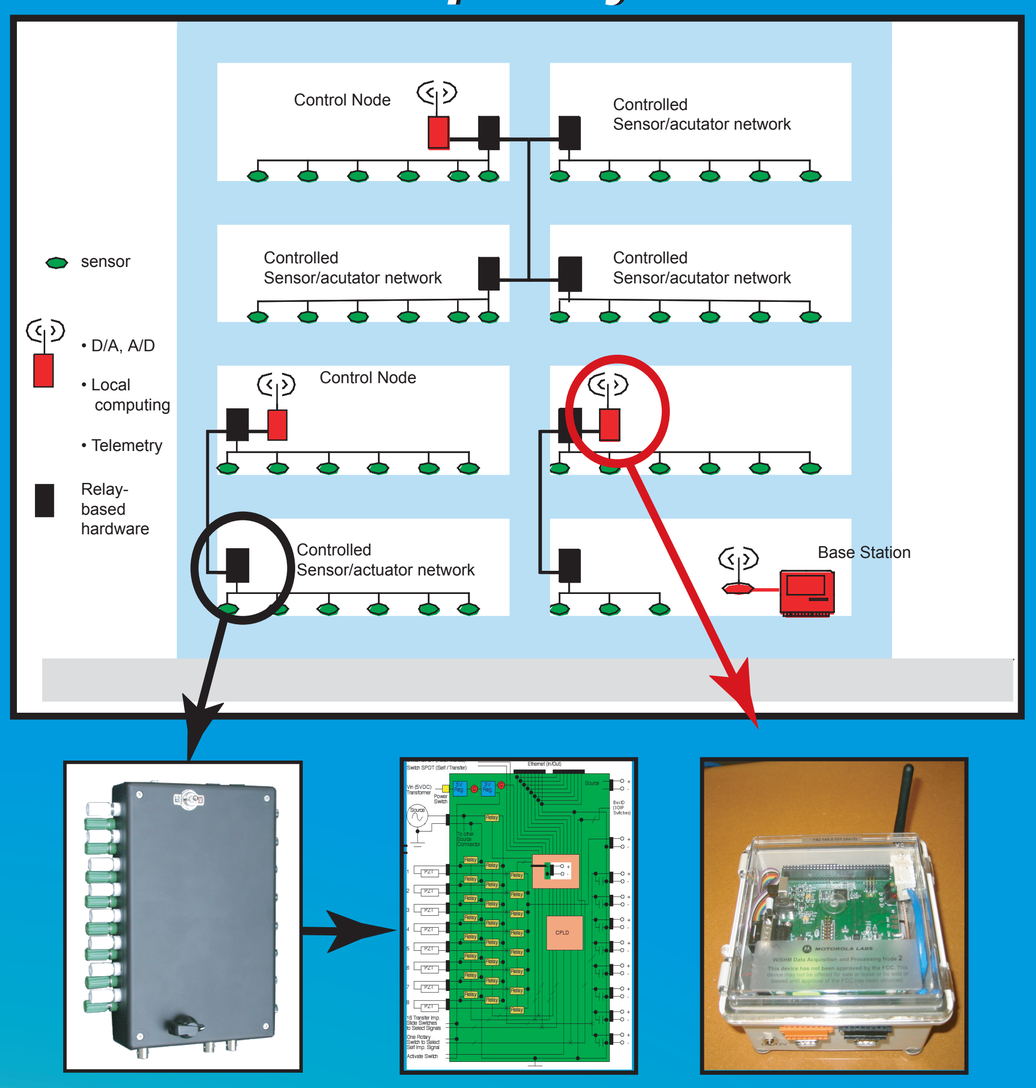

Power Harvesting

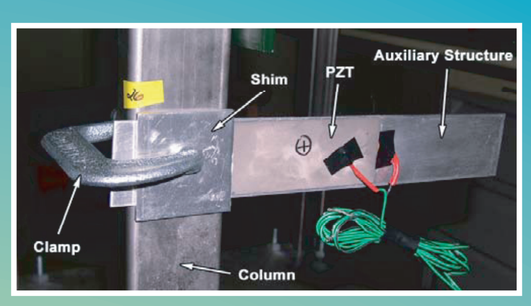

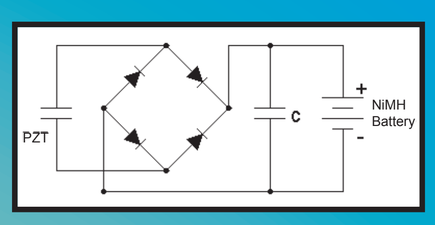

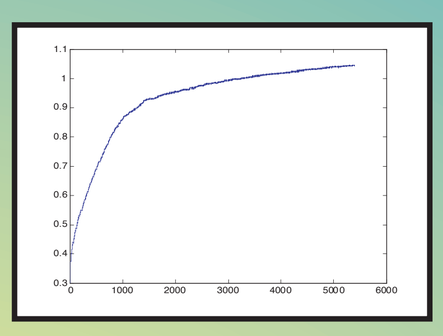

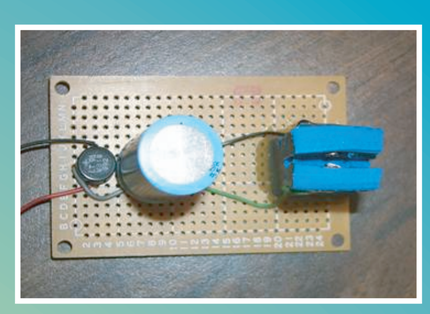

Piezoelectric materials can convert ambient vibration into useful electrical energy.