LA-UR:06-8673, American Society of Engineering Educators Annual Conf. and Exposition, Honolulu, HI, June, 2007

THE DYNAMIC SUMMER SCHOOL – A UNIQUE EDUCATIONAL PROGRAM

Phillip J. Cornwell
Rose-Hulman Institute of Technology

Charles R. Farrar
Los Alamos National Laboratory

Peter Avitabile
University of Massachusetts Lowell

ABSTRACT

The Los Alamos Dynamics Summer School (LADSS), which is funded by Los Alamos National Laboratory (LANL), is a unique nine-week program that was initiated in 2000 to focus a select group of prospective upper level undergraduate students and first year graduate students on the broad fields of engineering dynamics with specific applications to structural diagnostics, non-destructive evaluation and manufacturing process modeling. The summer school activities include four basic elements: lectures on basic fundamental engineering topics; a distinguished lecturer series on "cutting edge research"; a mini-project consisting of a modal test, finite element analysis, model correlation and validation of a small test structure; a research project that results in a conference paper and presentation. In this paper the details of the program, how it has evolved over the past seven years and of how it is assessed will be presented.

INTRODUCTION

The authors of the National Academy of Science report *Rising above the Gathering Storm* [1] write with urgency of the need for the United States to strengthen the scientific and technical building blocks that lead to economic prosperity. The number of Master's and Ph.D. degrees awarded in engineering has decreased approximately 7% and 13% from 1996 to 2001 [2] and the number of Ph.D.'s awarded in mechanical engineering has decreased approximately 19% from 1996 to 2004. Engineering dynamics, which encompasses areas such as flight dynamics, vibration isolation for precision manufacturing, earthquake engineering, structural health monitoring, signal processing, experimental modal analysis, etc. is naturally affected by this decrease in numbers. This trend is of particular importance to Los Alamos National Laboratory because of its reliance on employees with advanced degrees. The problem is further exasperated by the need for most employees of LANL to be US citizens so they are able to obtain the requisite security clearances. The Los Alamos Dynamics Summer School (LADSS) is an innovative, proactive approach that is designed to not only benefit the students through their educational experience, but also to motivate them to attend graduate school and to make the students aware of career possibilities in defense-related industries after they have completed their graduate studies

DESCRIPTION OF THE SUMMER SCHOOL

The first LADSS took place in the summer of 2000 and was an eight-week program involving 13 students. The program is now in its seventh year and has grown to be nine weeks long involving 21 students. A total of 111 students have participated in the program. The program is available to students who have completed their junior year in college up to those completing their first year of graduate school. Since one of the objectives of the program is to motivate students to go to graduate school, preference is usually given to students who are not yet in graduate school. Thus far, the students participating in the program have been as follows: 67 students just received junior year, 30 students just finished their undergraduate degree, and 14 first year graduate students. Over 34 undergraduate universities have had students participate. Students in the program have had undergraduate majors in mechanical engineering (82), civil engineering (19), aerospace engineering (3), electrical engineering (4), engineering mechanics (2) and mathematics (1).

The summer school has three primary educational objectives. First, the multi-disciplinary nature of research in engineering dynamics is emphasized throughout the summer school. To this end, the students are assigned to teams and are given a project where a coupled analytical/experimental approach is usually required. Students also attend numerous tutorials on relevant topics and distinguished guest lecturers give presentations on their research. They also interact with the student groups and give advice on their projects. Second, the program is designed to develop the students' written and oral communication skills. To develop these skills, the students are required to give numerous informal oral presentations and written documentation of their work as it progresses throughout the summer, culminating in a formal presentation and a paper written for a technical conference. Finally, students are exposed to the process of performing an experimental modal analysis on a test item, developing a finite element model of the same structure, and updating, verifying and validating the model. This process helps students understand and appreciate the limitations and strengths of testing and modeling. A typical summer school schedule is shown in the appendix.

The Project

The centerpiece of the summer school is a research project usually having both an analytical and an experimental component. Students are placed in teams of three and assigned a project. An attempt is made to make the groups as multidisciplinary and diverse as possible. The experimental component is a critical aspect of the program since practical experimental activities in engineering dynamics are almost nonexistent at the undergraduate level. Each team has a staff member from Los Alamos National Laboratory or a university professor working at LANL for the summer as a mentor. The mentors work closely with their groups providing guidance, encouragement, and technical expertise. It is important to note that none of these projects have a known outcome. To date, all of the projects have resulted in papers presented at the IMAC conference and many of the projects have also resulted in refereed journal publications. In almost all cases these are the first conference papers that the students have written.

Although in the first few years of the program the projects were primarily in the area of structural dynamics, the scope of the projects now include the areas of manufacturing, bioengineering, and non-destructive evaluation. Research projects have been performed in the areas of structural health monitoring [4-13], modeling or increasing the damping of structures [14-16], biomechanics [17-19], applications involving controls [20-24], non-destructive evaluation [25-26], sports equipment modeling [27-28], energy harvesting [29-30], and structural modeling [31-33]. Examples of some of the structures tested include a model of a three-story building (Figure 1), a pipeline structure (Figure 2), a simulated femur (Figure 3), an eight degree of freedom system to study nonlinear characteristics (Figure 4), and many others.

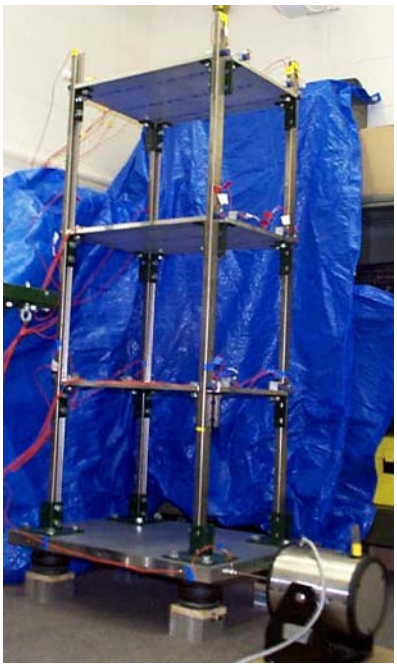

Figure 1. Simple model of a three-story building used for damage detection in joints and as a base structure for studies in energy harvesting

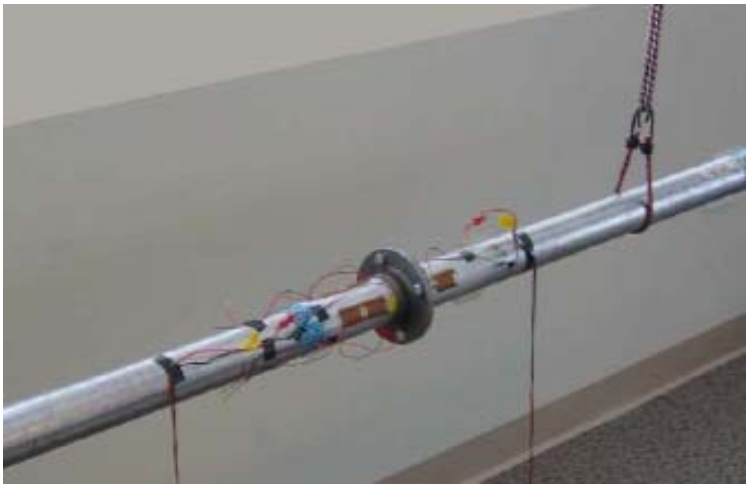

Figure 2. Pipeline structure used for a study using piezoelectric active sensing for damage detection.

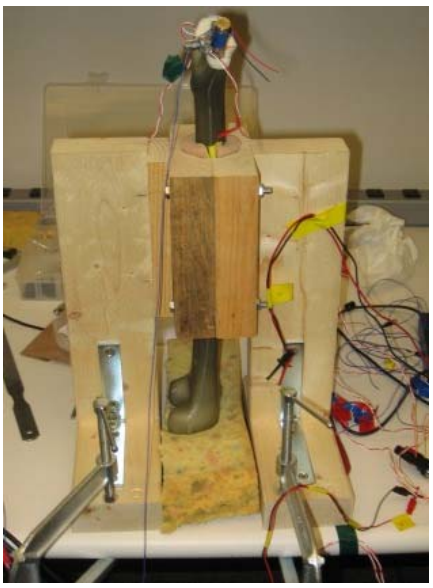

Figure 3. The test setup used for a project involving detecting when a hip prosthesis is fully seated in a simulated femur.

The Tutorials and Guest Lecturers

Each week a prominent guest lecturer gives a talk to the students about "cutting edge research" in structural dynamics or a related area. Most of the lecturers spend two or three days in Los Alamos and they spend time with the student teams to discuss their projects, provide suggestions and provide additional motivation. Internationally well-known individuals such as Dan Inman from Virginia Tech, Dave Ewins from Imperial College, Nick Lieven from the University of Bristol, Dave Brown from the University of Cincinnati, and many other prominent, well-known people have participated in the LADSS as guest lecturers.

Figure 4. An 8-DOF system that can be modified by changing springs or putting bumpers between masses.

In addition to the project and the lectures by, and interaction with, the visiting distinguished scholars, the students receive instruction on a variety of topics in engineering dynamics. Many of these lectures are designed to introduce students to three different ways of looking at structural dynamics problems depending on the time scale and phenomenon of interest. These three ways are: 1) rigid body motion, 2) mechanical vibrations, and 3) wave propagation. In order to illustrate these ideas the motion resulting from an impact in Figure 5 is discussed. The resulting response can be looked at in terms of rigid body motion, mechanical vibrations and wave propagation as shown in Figure 6.

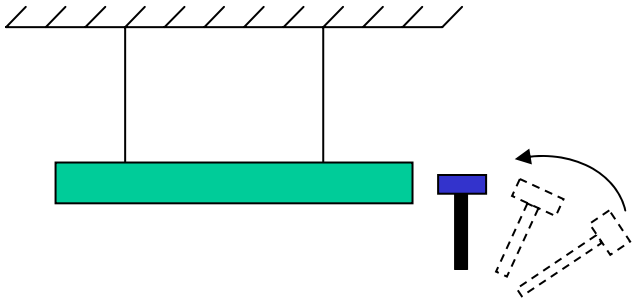

Figure 5. A hammer striking a rod can be used to illustrate three areas of structural dynamics.

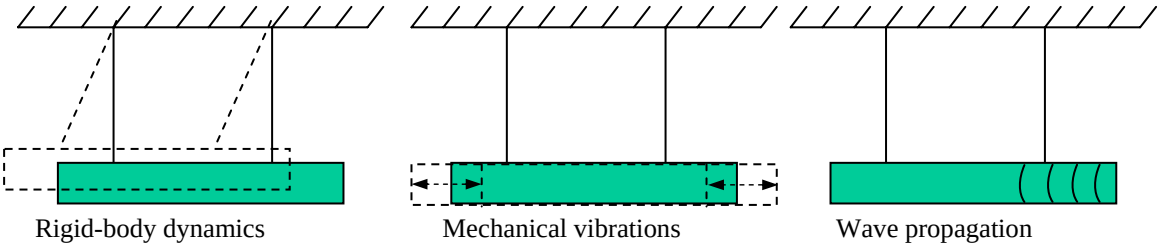

Figure 6. Different ways of looking at the result of striking a rod with a hammer.

To strengthen students' understanding of these various ways of looking at the motion of a structure, they are presented a series of lectures on rigid body dynamics, mechanical vibrations and wave propagation. Other tutorials discuss signal processing, controls, computational structural dynamics, nonlinear vibrations, and model validation. Staff members from LANL also present lectures on various applications such as structural health monitoring, high explosive radio telemetry, satellite dynamics, very large finite element models of blast loading, etc.

Test, Model, Refine

A recent addition to the LADSS is a mini-project that involves experimental modal analysis and finite element modeling of a structure. Although universities offer courses in finite element analysis and some have courses that expose students to experimental modal analysis, it is rare to have students perform a modal test on a structure, develop a finite element model of the same structure and then reconcile their models to better match the experiment. The LADSS provides students with this unique opportunity. In previous summer schools student groups were required to perform an experimental modal test and a finite element analysis of a structure, but starting during the 7th summer school in 2006, all the student groups were required to perform their experimental modal tests and finite element models of the structure shown in Figure 7. Each group was provided with a structure constructed to the same specifications.

Each group performed three modal tests on the structure with students alternating the roles of running the data acquisition system, using the impact hammer, and curve fitting the data using MEScope. Between each test, the structure was disassembled and reassembled. This data was subsequently used during lectures on model updating, verification, validation and uncertainty quantification.

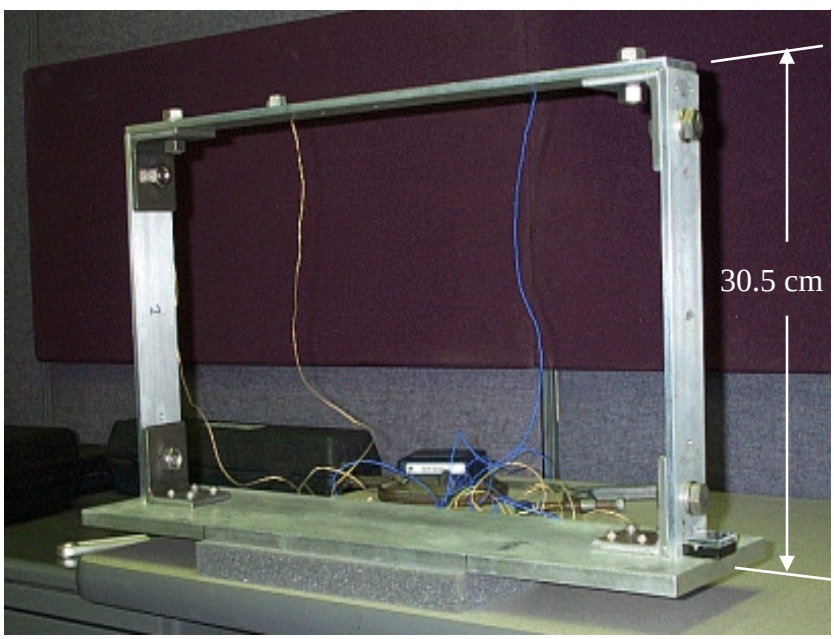

Figure 7. Frame structure tested by each student group

The general specifications for the experimental modal test were as follows:

- Measurement points were along the midline and edges of the sides, top and bottom of the structure as shown in Figure 8.
- There were a total of 45 geometric points resulting in 57 measurements (the corner points were to be excited in two directions).
- Three accelerometers we used (10 mV/g or greater sensitivity) but the location was
- Accelerometers mounted using wax
- Number of averages: 5-10
- Number of points: 4096
- Frequency range: ~ 1000 Hz

To save time, for the 2nd and 3rd modal test only the points along the midline were used. Note that no measurements were taken in the x-direction. This was done by design so when students were comparing their finite element models to the experimental results there will be additional modes in the finite element models corresponding to the out-of-plane modes.

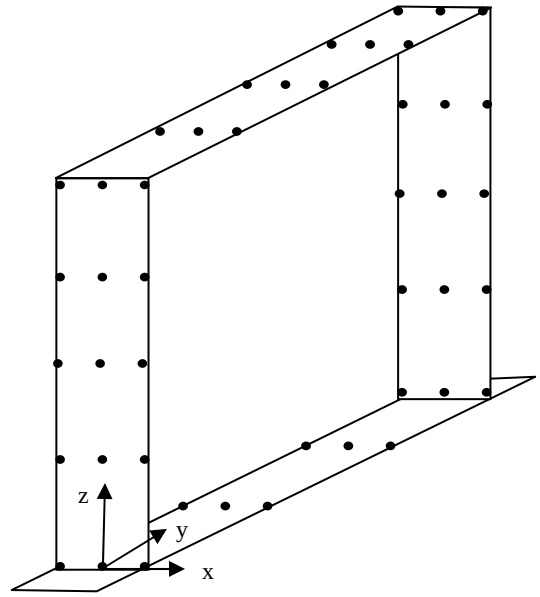

Figure 8. Measurement points locations. The structure was resting on bubble wrap to simulate a free-free boundary condition

The seven teams did a total of 21 modal tests on nominally identical structures (three tests per structure with a disassembly and reassembly between tests). The results for the first eight modes are shown in Table 1. The frequency and damping identification was done using MEScope. As expected, there was considerably more spread in the damping values than the frequency and the out of plane modes were not identified in this test. These results are provided so that if other faculty members are interested in having their students perform a finite element model of a structure this data can be used for model updating.

Table 1. Average frequency and damping for all the modal tests performed on the frame structure.

Mode Number	Frequency (Hz)	Modal Damping
1	68	0.20
2	105	0.57
3	186	0.32
4	287	0.71
5	421	0.17
6	453	1.32
7	638	0.51
8	747	0.43

Students were also required to individually perform a finite element model of the structure. One student in each group used a beam model, one a shell model, and one a continuum model. The students were given the following specifications:

Geometry: As shown in Figure 9.

Nominal material properties:

Angle Iron for brackets:	Aluminum:
$E = 29\text{x}10^6$ lb/in^2	$E = 10\text{x}10^6$ lb/in^2
$\nu = 0.29$	$\nu = 0.33$
$\gamma = 0.284$ lb/in^3	$\gamma = 0.0979$ lb/in^3
$\rho = 7.35\text{x}10^{-4}$ lb-s^2/in^4	$\rho = 2.53\text{x}10^{-4}$ lb-s^2/in^4

Boundary conditions: Free-free

Simplifications: Neglect the bolts in the initial model. There are six ½" diameter, 1" long hex cap bolts and eight 10/24 ½" long socket head cap screws (used to attach the brackets to the aluminum base).

Output:

1. First 10 non-zero natural frequencies in Hz. Be sure to compare the modes to those obtained in your experiment so you know you are comparing the corresponding analytical and experimental modes.
2. Displacement of first 10 mass normalized modes at the midpoint of the cross beam in the vertical direction.

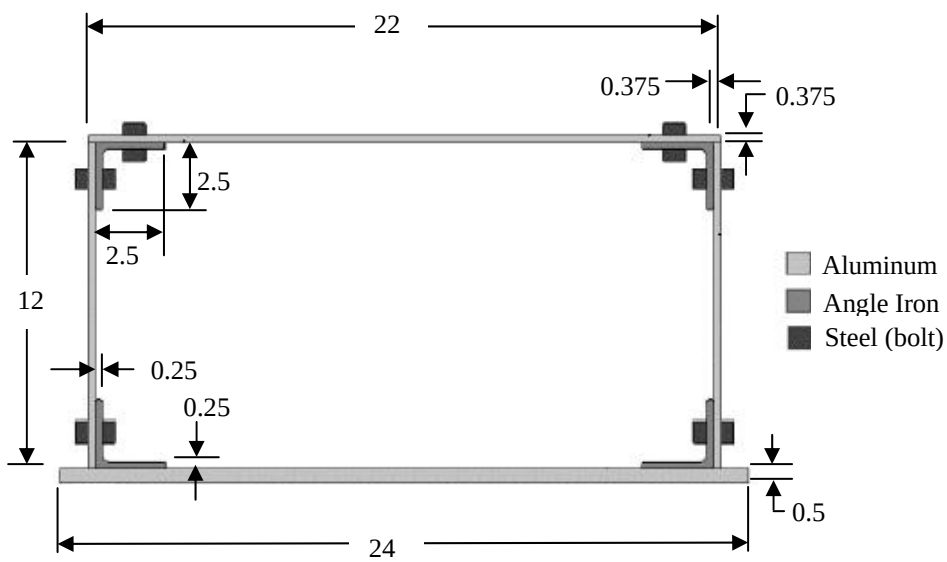

Notes:
All dimensions in inches
Depth into plane = 2 in., except base plate = 6 in.
All four brackets are identical with thickness of 0.25 in.
The two sides are identical with thickness 0.375 in.

Figure 9. Geometry of frame structure

Snapshots of the first mode of vibration identified from the experiment and from the finite element models are shown in Figure 10. The frequencies shown are those obtained prior to any model updating. The main difference between the shell element and continuum element models versus the beam element model shown in Figure 10 is how the brackets were modeled.

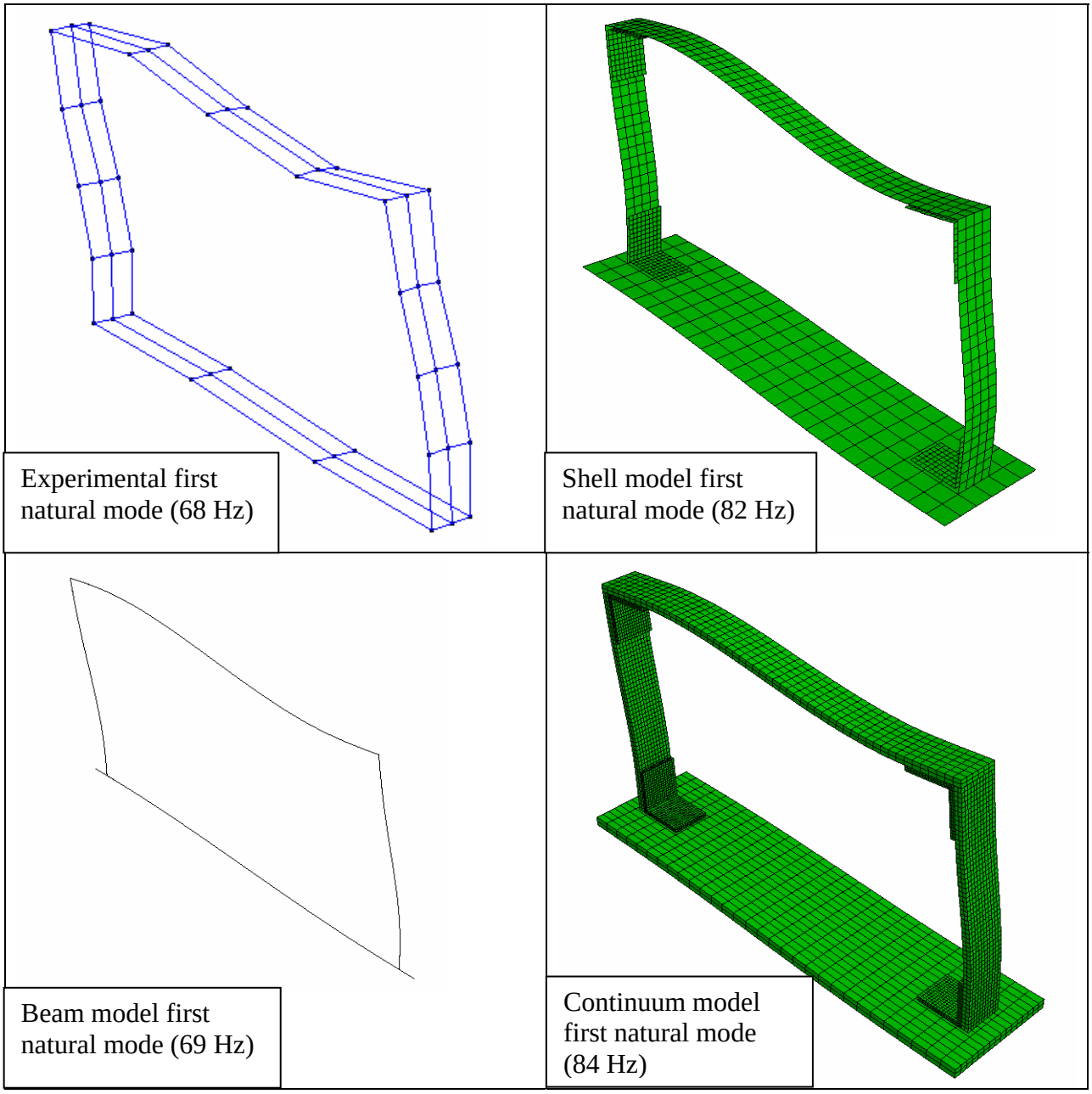

Figure 10. First mode shape from the experiment and FE models.

This exercise allowed for fruitful discussions about finite element modeling and experimental testing. Participating in these discussions were the students, several mentors and a staff member

from LANL who has used ABAQUS extensively and is a very experienced analyst. Several modes that appeared in the finite element models were not identified in the experiment allowing for the students to learn the limitations of experimental results when measurements are not taken in all directions.

Discussion topics related to the finite element modeling included modeling assumptions such as mesh density, types of element, order of elements, modeling the joints, modeling boundary conditions, and the need to be very cautious when evaluating finite element results. For example the continuum element model and the shell element model, both using quadratic elements and tied connections between the elements representing the iron brackets and the aluminum sides, top and bottom plates, were very consistent with each other and differed by about 2% in the first natural frequency as shown in Figure 10. The models differed from the experiment, however, by over 25%! This error was most likely due to the modeling assumption that the bracket is perfectly tied to the aluminum. When this constraint was relaxed the frequencies from the model were much closer to those from the experiment. The beam model resulted in frequencies much closer to the experimental results, but probably for the wrong reason. In this model, the elements corresponding to the bracket were placed coincident with the elements representing the aluminum parts. The nodes were then constrained using a tied connection. Although this model was clearly geometrically wrong, the resulting frequencies were closer to those obtained in the experiment. This result was confirmed using the shell model by moving the bracket to the corner in a similar way. The lesson for the students was that just because a model matches the experimental data, doesn't mean it is correct.

Another modeling assumption made was to neglect the mass of the bolts. This added mass was easily added to the model by putting point masses at the bolt locations. This added mass of the bolts lowered the frequencies by several Hertz.

This mini-project also provided a wonderful opportunity to discuss with the students what to do with a finite element model if there are no experimental results to use to validate the model. For example, in this case, if no experimental data had been available it would have been reasonable for a novice analyst to trust the results of the shell and beam models and to use a tied connection between the bracket and the rest of the structure. The skilled analyst participating in the discussion emphasized the importance of trying to bound a solution when there are uncertainties in the modeling, such as how to model the bracket connection. For example, when trying to model this structure a model tying all the nodes between the iron bracket and the aluminum structure would provide an upper bound on the frequencies and one just tying the nodes around the bolt location would provide a lower bound on the frequencies. This indeed turned out to be the case.

Other Changes Since the Programs Inception

In addition to the incremental improvements associated with improving tutorials and broadening the scope of the invited lectures, the program has changed in several other ways. The quality of the experimental equipment has improved drastically from the first summer. The program has moved to using LabView and NI equipment since many universities use this software and hardware. A student using one of the 24 bit NI-DAQ systems from National Instruments, model

number PXI-1042, is shown in Figure 11. Each group has a dedicated data acquisition system, a suite of accelerometers, a small shaker, impact hammers, calibrators, an oscilloscope and a variety of other tools. Other equipment is available as is necessary for specific projects such as an impedance analyzer or ultrasonic imaging system. Each group has its own laboratory and office space.

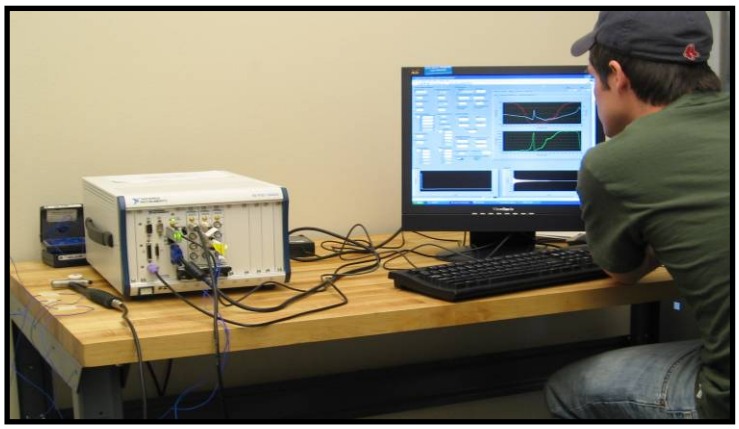

Figure 11. Student using one of the NI data acquisition systems.

To motivate students to attend graduate school and to make them aware of fellowship opportunities the LADSS includes a presentation and discussion specifically devoted to this topic. This presentation includes information on what they can expect from graduate school, why they should consider attending, what they need to do to apply and be successful in getting accepted to the graduate school of their choice, financial aid available and how to decide what offer to take. Mentors and other staff members from LANL with advanced degrees participate in the discussion so students hear a variety of perspectives. A "fellowship primer" has been developed that includes information on what fellowships are available, such as NSF, DOD, NASA, etc., advice on how to develop a successful application, samples of applications and reviewer feedback of former LADSS students who were successful in receiving an NSF fellowship, advice from former LADSS students, and comments from several reviewers of NSF fellowship applications.

ASSESSMENT

The various elements of the LADSS are continually evaluated. Each year every speaker is assessed and there is a final overall survey. This data is used to improve the overall program and to make modifications to the program. Since the program's inception, the overall rating of the summer school has been **4.73/5.0** and the comments are extremely positive**.** Plus, **100% of the students indicate they would recommend the program to a friend**! Each year many of the applicants are a result of former students recommending the program to classmates at their universities.

Students have also been very successful in obtaining competitive fellowships. Thus far our students have received:

- 12 NSF Graduate Fellowships (6 honorable mentions)
- 5 National Defense Science and Engineering Fellowships
- 2 Graduate Education for Minorities (GEM)
- 2 NASA Graduate Fellowships
- 2 National Physical Science Consortium Fellowships

Approximately ninety-five percent of the students have proceeded on to graduate school and have obtained, or are pursuing, Master's and/or Doctorate degrees. In fact, some students who had originally expressed a desire to study in other fields have been so excited by the program that they have gone to graduate school in structural dynamics instead.

One of the objectives of this program, from the perspective of LANL, is the recruitment of employees. To date, nine staff members have been hired from this program and 25 students have returned to LANL to work during a subsequent summer. Because a minimum of a Master's degree is typically required for a new technical staff member at LANL, it is important to maintain contact with the students after they complete the summer school since it will often be three to five years before they will have received an advanced degree. Providing the opportunity for interested students to return to work at the Lab in subsequent summers has been an effective way to maintain this contact.

CONCLUSIONS

A summer program has been developed, implemented and improved since 2000 at Los Alamos National Laboratory. The program appears to have achieved its primary goals of motivating undecided students to go to graduate school, of introducing a talented group of engineering students to both analytical and experimental engineering structural dynamics, and of making them aware of career opportunities at national laboratories such as Los Alamos, Sandia and Livermore National Laboratory. A mini-project involving experimental modal analysis and finite element modeling provides students with a unique educational opportunity unavailable at most, if not all, universities. The students rate the summer school as excellent. There has also been a significant influx of new talent to the LANL workforce that may not otherwise have materialized.

ACKNOWLEDGEMENTS

The LADSS has been fortunate to have ongoing support from Abaqus, MATLAB and Vibrant Technology – these companies have provided software for students to use for the Dynamic Summer School. Their support is greatly appreciated. The LADSS has also been very fortunate in having excellent mentors and lecturers who have provided support to the program over the years. A complete listing of these is shown in the Appendix. Their efforts are also greatly appreciated. And lastly, to the students who have participated in the program over the years, they have contributed to the program as well as greatly benefited from the program.

REFERENCES

1. National Academies Press, *Rising Above The Gathering Storm: Energizing and Employing America for a Brighter Economic Future* (2006)
2. National Science Foundation, Division of Science Resources Statistics, *Science and Engineering Degrees: 1966-2001*, NSF 04-311, Project Officers, Susan T. Hill and Jean M. Johnson (Arlington, VA 2004).
3. National Science Foundation, Division of Science Resources Statistics, *Science and Engineering Doctorate Awards: 2004*, NSF 06-308, Project Officer, Susan T. Hill (Arlington, VA 2006).

BIBLIOGRAPHY OF SUMMER SCHOOL PAPERS BY TOPIC

Structural health monitoring

4. Allen, D.W., S. Castillo, A.L. Cundy, C.R. Farrar, R.E. McMurry, "Damage Detection in Building Joints by Statistical Analysis," *Proceedings of the 19th IMAC Conference on Structural Dynamics*, Kissimmee, Florida, Feb. 2001.
5. Wait, J.R., B.Y. Arcand, J.E. Webster, N.F. Hunter, "Identification of Nonlinearities in an 8-DOF System Through Spectral Feedback," *Proceedings of the 19th IMAC Conference on Structural Dynamics*, Kissimmee, Florida, Feb. 2001.
6. Brockman, A., J. Clough, K. Mulji, N. Hunter, "Identifying the Effects of Stiffness Changes in a 5-DOF System," *Proceedings of the 20th IMAC Conference on Structural Dynamics*, Los Angeles, CA, Feb. 2002.
7. Fasel, T.R., S.W. Gregg, T.J. Johnson, C..R. Farrar, H. Sohn , "Experimental Modal Analysis and Damage Detection in a Simulated Three Story Building," *Proceedings of the 20th IMAC Conference on Structural Dynamics*, Los Angeles, CA, Feb. 2002.
8. Do, N.B., S.R. Green, T.A. Schwartz, "Structural Damage Detection Using the Holder Exponent," *Proceedings of the 21st IMAC Conference on Structural Dynamics*, Kissimmee, FL, Feb. 2003
9. Taylor, S., C. Rupp, D. Johnson, C.R. Farrar, P. Avitabile, "Failure Prediction in Composite Plates with Impact-Induced Damage," *Proceedings of the 22st IMAC Conference on Structural Dynamics*, Dearborn, MI, Feb. 2004.
10. Chang, L.Y., K.A. Erickson , K.G. Lee , M.D. Todd, "Structural Damage Detection Using Chaotic Time Series Excitation," *Proceedings of the 22st IMAC Conference on Structural Dynamics*, Dearborn, MI, Jan. 2004.
11. Thien, A.B., H.C. Chiamori, J.T. Ching, J.R. Wait, G. Park, "Piezoelectric Active Sensing for Damage Detection in Pipeline," *Proceedings of the 23rd IMAC Conference on Structural Dynamics*, Orlando, FL, Jan. 2005.
12. Pask, D., F.P.E. Rael, C.A. Whyte, A. Rutherford, J. Pepin, "The Effect of Fixed - Joint Uncertainty on Dynamic Properties," *Proceedings of the 24rd IMAC Conference on Structural Dynamics*, St. Louis, MO, Jan. 2006.
13. Swartz, R.A., E. Flynn, D. Backman, R.J. Hundhausen, G. Park, "Active Piezoelectric Sensing for Damage Identification in Honeycomb Aluminum Panels," *Proceedings of the 24rd IMAC Conference on Structural Dynamics*, St. Louis, MO, Jan. 2006.

Modeling or increasing the damping of structures

14. Moloney, C.W., D.M. Peairs, E.R. Roldan, "Characterization of Damping in Bolted Lap Joints," *Proceedings of the 19th IMAC Conference on Structural Dynamics*, Kissimmee, Florida, Feb. 2001.
15. Granier, J.J., R.J. Hundhausen, G.E. Gaytan, "Passive Modal Damping with Piezoelectric Shunts," *Proceedings of the 20th IMAC Conference on Structural Dynamics*, Los Angeles, CA, Feb. 2002.
16. Kess, H.R., N.J. Rosnow, B.C. Sidle, "Effects of Bearing Surfaces on Lap Joint Energy Dissipation," *Proceedings of the 20th IMAC Conference on Structural Dynamics*, Los Angeles, CA, Feb. 2002.

Biomechanics

17. Crowell, B.L., B. A. Stalcup, D. W. Stinemates, "Design of Personal Air Bag Spinal Protection Device," *Proceedings of the 19th IMAC Conference on Structural Dynamics*, Kissimmee, Florida, Feb. 2001.
18. Giardini, S., D. Laney, A.C. Rutherford, C.R. Farrar, "Monitoring Femoral Component Insertion in Cementless Total Hip Arthroplasty," *Proceedings of the 23rd IMAC Conference on Structural Dynamics*, Orlando, FL, Jan. 2005.
19. Abou-Trabi, D., M. Guthrie, H. Moore, P. Cornwell, A. Rosenberg, R.M. Meneghini, "Monitoring Femoral Component Insertion During Uncemented Total Hip Arthroplasy," *Proceedings of the 24rd IMAC Conference on Structural Dynamics*, St. Louis, MO, Jan. 2006.

Controls

20. Eisenhour, T., S. Hatchett, I. Salazar, "Active Vibration Damping in the Presence of Uncertainties," *Proceedings of the 21st IMAC Conference on Structural Dynamics*, Kissimmee, FL, Feb. 2003.
21. Hodgkins, J., D. Mascarenas, G. Simmers Jr., "Modifying Self-Sensing Circuit To Increase Stability Of Vibration Control," *Proceedings of the 22st IMAC Conference on Structural Dynamics*, Dearborn, MI, Jan. 2004.
22. Yu, K., S. Holman, K. Brinkley, "Shaker Control in the Presence of Nonlinearities," *Proceedings of the 22st IMAC Conference on Structural Dynamics*, Dearborn, MI, Jan. 2004.
23. Jacobs, L, A. Rosenbaum, N. Stites, M. Bement, "Assessment of Robust Control on Damage Growth," *Proceedings of the 23rd IMAC Conference on Structural Dynamics*, Orlando, FL, Jan. 2005.
24. Cardi, A.A., B.D. Kosbab, T.G. Overly, J.F. Schultze, M.T. Bement, "Damage Assessment Through Control Feedback Expansion of Modal Space," *Proceedings of the 24rd IMAC Conference on Structural Dynamics*, St. Louis, MO, Jan. 2006.

Non-destructive evaluation

25. Conboy, M. S. Hart, D. Harris-Weiel, R. Meyer, T.N. Claytor, "Optimizing Ultrasonic Imaging for Adhesively Bonded Plates," *Proceedings of the 23rd IMAC Conference on Structural Dynamics*, Orlando, FL, Jan. 2005.
26. Gonzales, M., G. Graf , R. Cooper, B. Nadler, T. Claytor, T. Tippetts, "Ultrasonic Assessment and Model Validation of Damage in Carbon-fiber Based Composites," *Proceedings of the 24rd IMAC Conference on Structural Dynamics*, St. Louis, MO, Jan. 2006.

Sports equipment modeling

27. Buechler, M.A., L.A. Espino, G.A.Thompson, R. Shinn ,"Vibration Modeling and Suppression in Tennis Racquets, " *Proceedings of the 21st IMAC Conference on Structural Dynamics*, Kissimmee, FL, Feb. 2003.
28. Askin, A., C.K. Crane, K. Marek, P. Avitabile, "Development of Analytical and Experimental Dynamic Model Representations for the Prediction of Baseball Bat Performance," *Proceedings of the 23rd IMAC Conference on Structural Dynamics*, Orlando, FL, Jan. 2005.

Energy harvesting

29. Damianakis, M., J. Goethals, J. Kowtko, P.J. Cornwell, "Enhancing Power Harvesting Using a Tuned Auxiliary Structure," *Proceedings of the 22st IMAC Conference on Structural Dynamics*, Dearborn, MI, Jan. 2004.

30. Van Zandt, T., J. McFarland, D. Wang and P. Cornwell, "Optimizing Tuned Auxiliary Structures for Power Harvesting," *Proceedings of the 23rd IMAC Conference on Structural Dynamics*, Orlando, FL, Jan. 2005.

Structural modeling

31. Jauhola, A., E. Kinzel, D. Reding, N. Hunte, "Model Parameters for a Flat Plate Supported by an Oil Film," *Proceedings of the 21st IMAC Conference on Structural Dynamics*, Kissimmee, FL, Feb. 2003.
32. Aumann, R.J., A.S. McCarty, C.C. Olson, "Identification of Random Variation in Structures and Their Parameter Estimates," *Proceedings of the 21st IMAC Conference on Structural Dynamics*, Kissimmee, FL, Feb. 2003.
33. Collins, J., M. Nothnagel, J. Pretko, A. Barhorst, "Model Validation of Loose Bolted Joints in Damaged Structural Systems," *Proceedings of the 24rd IMAC Conference on Structural Dynamics*, St. Louis, MO, Jan. 2006.

APPENDIX

Table 1. Typical program schedule

	Date	Tutorial and Other Activities	Guest Lectures
Week 1	6/12	Student Orientation; Assignment descriptions	
	6/13	Safety Training; Laboratory Protocol and Lab Notebooks	
	6/14	Intro to Instrumentation; Labview Training	
	6/15		Structural Health Monitoring (SHM)
	6/16	Introduction to Signal Processing	
Week 2	6/19	Rigid Body Dynamics	
	6/20	Rigid Body Dynamics	Active Sensing for SHM
	6/21	Rigid Body Dynamics	
	6/22	Controls	Introduction to Smart Materials
	6/23	Controls	
Week 3	6/26	Vibrations	
	6/27	Experimental Modal Testing	Fiber Optics Applications for Sensing
	6/28	Experimental Model Reduction	
	6/29	Modal Analysis Theory	High Explosives Radio Telemetry
	6/30	Modal Analysis Theory	
Week 4	7/3	Analytical Modeling Considerations	
	7/5	Modal Parameter Estimation	
	7/6	Excitation Techniques for Modal Testing	Aerospace Structural Dynamics
	7/7	Linear Algebra and Structural Dynamics	
Week 5	7/10	Computations Mechanics I	
	7/11	Computations Mechanics II	Random Vibrations
	7/12	Computations Mechanics III	
	7/13	Computations Mechanics IV	
	7/14	Sandia National Laboratory Field Trip	
Week 6	7/17	Wave Propagation I – Introduction	
	7/18	Wave Propagation II – NDE	Large Scale Computing at LANL
	7/19	Wave Propagation III – Acoustics	
	7/20	Wave Propagation IV – Blast and seismology	Guest Lecture
	7/21	Student Presentation on Preliminary Work– Interim Report	
Week 7	7/24	Nonlinear Vibrations I	
	7/25	Nonlinear Vibrations II	Wireless Sensing
	7/26	Nonlinear Vibrations III	
	7/27	Nonlinear Vibrations IV	Sporting Equipment Dynamics
	7/28	Nonlinear Vibrations V	
Week 8	7/31	Model Validation I	
	8/1	Model Validation II	Satellite Dynamics - Alexis
	8/2	Model Validation III	
	8/3	Model Validation IV	Satellite Dynamics - Forte
	8/4	Model Validation V	Graduate School Discussion
Week 9	8/7		
	8/8		
	8/9		
	8/10	Student Presentations	
	811	Student Presentations	

Table 2. Mentors, guest speakers and tutorial lecturers who have participated in the summer school.

Name		Institution
Doug Adams	Guest lecture	Purdue University
Frank Addessio	Guest lecture	Los Alamos National Laboratory
David Allen	Mentor	Los Alamos National Laboratory
Michael Alley	Guest lecture	Virginia Tech
Pete Avitabile	Mentor, Tutorial	University of Massachusetts Lowell
Bill Baker	Tutorial	University of New Mexico (retired)
Matt Bement	Mentor, Tutorial	Los Alamos National Laboratory
Joel Bennett	Mentor, Tutorial	Los Alamos National Laboratory
Alan Barhorst	Mentor, Tutorial	Texas Tech University
Chris Brislawn	Guest lecture	Los Alamos National Laboratory
Dave Brown	Guest lecture	University of Cincinnati
James Brownjohn	Guest lecture	Technological University, Singapore
Tom Butler	Guest lecture	Los Alamos National Laboratory
Tom Claytor	Mentor, Tutorial	Los Alamos National Laboratory
Phillip Cornwell	Mentor, Tutorial	Rose-Hulman Institute of Technology
Fred Costanza	Guest lecture	Naval Surface Weapons Lab
Scott Doebling	Guest lecture	Los Alamos National Laboratory
Dave Ewins	Guest lecture	Imperial College, UK
Chuck Farrar	Mentor, lecture	Los Alamos National Laboratory
Jobie Gerkin	Tutorial	Los Alamos National Laboratory
Tom Kenny	Guest lecture	Stanford University
Anne Kiremidjian	Guest lecture	Stanford University
John Kosmatka	Guest lecture	University of California at San Diego
Francois Hemez	Tutorial	Los Alamos National Laboratory
Bill Hodgkiss	Guest lecture	University of California at San Diego
Jason Hundhausen	Mentor	Los Alamos National Laboratory
Norm Hunter	Mentor, tutorial	Los Alamos National Laboratory
Daniel Inman	Guest lecture	Virginia Tech
Creston Kuenzi	Guest lecture	National Instruments
Don Leo	Guest lecture	Virginia Tech
Nick Lieven	Guest lecture	Bristol University, UK
Jerry Lynch	Guest lecture	University of Michigan
Ryan Maupin	Guest Lecture	Los Alamos National Laboratory
Brett Nadler	Mentor	Los Alamos National Laboratory
Robert Nigbor	Guest lecture	USC
Tom Paez	Mentor, tutorial	Sandia National Laboratory
Gerry Pardoen	Guest lecture	University of California, Irvine
Gyuhae Park	Mentor, tutorial	Los Alamos National Laboratory
Jason Pepin	Guest lecture	Los Alamos National Laboratory
Tom Peterson	Guest lecture	Los Alamos National Laboratory
Charlie Pickrel	Guest lecture	The Boeing Company
Anthony Puckett	Mentor, tutorial	Los Alamos National Laboratory
Amy Robertson	Mentor, tutorial	HyTech
Mandy Rutherford	Mentor	Los Alamos National Laboratory
Frieder Seible	Guest lecture	University of California, San Diego
Rachel Shinn	Mentor	Embry Riddle Aeronautical University
John Schultze	Mentor	Los Alamos National Laboratory
Hoon Soon	Mentor	Carnegie Mellon University
Bob Stephens	Guest lecture	Los Alamos National Laboratory
Mike Todd	Mentor, guest lecture	University of California, San Diego
Geof Tomlinson	Guest lecture	University of Sheffield, UK
Kurt Veggeberg	Guest lecture	National Instruments
Jeni Wait	Mentor	Los Alamos National Laboratory
Dave Zimmerman	Guest lecture	University of Houston

LA-UR:06-8673, American Society of Engineering Educators Annual Conf. and Exposition, Honolulu, HI, June, 2007