AC 22-92 PC 92159

CONF-951010--3

IMPROVING PULVERIZED COAL PLANT PERFORMANCE

1995 International Joint Power Generation Conference

John W. Regan, Project Director
Richard W. Borio
Mark Palkes
ABB Power Plant Laboratories
Combustion Engineering, Inc.
Windsor, Connecticut

Mark D. Mirolli
ABB CE Systems
Combustion Engineering, Inc.
Windsor, Connecticut

James D. Wesnor
ABB Environmental Systems
Birmingham, Alabama

David J. Bender
Raytheon Engineers & Constructors, Inc.

ABSTRACT

A major deliverable of the U.S. Department of Energy (DOE) project "Engineering Development of Advanced Coal-Fired Low-Emissions Boiler Systems" (LEBS) is the design of a large, in this case 400 MWe, commercial generating unit (CGU) which will meet the Project objectives. The overall objective of the LEBS Project is to dramatically improve environmental performance of future pulverized coal fired power plants without adversely impacting efficiency or the cost of electricity. The DOE specified the use of near-term technologies, *i.e.*, advanced technologies that are partially developed, to reduce NO_X, SO_2 and particulate emissions to be substantially less than current NSPS limits. In addition, air toxics must be in compliance and waste must be reduced and made more disposable.

The design being developed by the ABB Team is projected to meet all the contract objectives and to reduce emission of NO_X, SO_2 and particulates to one-fifth to one-tenth NSPS limits while increasing net station efficiency significantly and reducing the cost of electricity. This design and future work are described in the paper.

INTRODUCTION

The original LEBS emissions objectives have been gradually tightened and the efficiency objective gradually raised in response to pressure from several directions. The contract objective for emissions are now approximately one-half of the original values for NO_X, SO_X and particulates and the efficiency objective has been raised substantially - 38% to 42% (HHV, net). The Team believes it would not be difficult to reduce the emissions by one-half again and to raise the efficiency target another 3-4 percentage points, and it proposes to do so.

LEBS is restricted to pulverized coal firing (PC) which is viewed by many as less glamorous than other coal-fired technologies such as IGCC and PFBC, most likely because of the misconception that PC with the Rankine steam cycle has neared its limits of efficiency and emissions performance. In truth, there is considerable room for cost-effective improvements. The path to these improvements is defined and is short. The required development effort is not great and the result will be low-risk low-cost familiar-looking systems which will be readily accepted by the conservative utility industry. The technologies described below are fuel-flexible and suited to retrofit, repowering and new applications.

DISTRIBUTION OF THIS DOCUMENT IS UNLIMITED

MASTER

TECHNOLOGIES TO ACHIEVE ENVIRONMENTAL OBJECTIVES

In-furnace NO_X Control

General Description. The most cost effective way to reduce nitrogen oxides when burning a fossil fuel, coal in this case, is through an in-furnace NO_X reduction process. The foundation for the Team's in-furnace NO_X reduction process is TFS 2000™, a proven technology which is currently being employed on a commercial basis. Briefly, it involves substoichiometric fuel/air operation in the firing zone, the use of concentrically arranged air injection in the windbox whereby the air jets are aimed at a larger imaginary circle than the fuel jets, the use of separated over fire air and the use of a pulverizer with a dynamic classifier. As with all in-furnace NO_X reduction systems, the key is to be able to operate in a mode which produces low NO_X without exacerbating the combustible losses, notably the carbon content in the fly ash. The objective of this in-furnace NO_X reduction process is to reduce nitrogen oxides leaving the primary furnace to 0.1 lb NO_X/MM Btu (0.14 g/Nm^3) or lower while maintaining an acceptable level of carbon in the fly ash. (Further NO_X reduction can be achieved with the downstream SNO_X™ process which is discussed below.)

The process for evaluating the various firing system concepts/configurations involves the use of computational modeling, small scale experimental testing in a Fundamental Scale Burner Facility (FSBF) and larger scale experimental testing in a Boiler Simulation Facility (BSF). Additionally, it has involved concurrent characterization of coal pulverization in a pulverizer equipped with a dynamic classifier. As NO_X levels are pushed ever lower it is imperative that the fuel particle size distribution also be more tightly specified as a primary means of controlling combustible losses. The two primary activities which will be addressed in this paper are preliminary results from testing in the FSBF and characterization of one of the LEBS coals in a Pulverizer Development Facility. Computational modeling will be addressed briefly.

Computational Modeling. Two models are being employed to help analyze the various firing systems concepts that have been formulated. A kinetics reaction model, CHEMKIN, is being used to provide a preliminary evaluation of the potential for various concepts to achieve the desired results. It is recognized that results from this evaluation are qualitative at best and can only be used to provide trends; nevertheless its use can be an important screening tool to help prioritize the most promising concepts for further evaluation. A computational fluid dynamics model, FLUENT, is being used to further evaluate concepts under conditions which better simulate actual boiler operation. Unlike CHEMKIN which assumes either well-stirred reactor conditions or perfect plug flow conditions, FLUENT is able to simulate real-world mixing conditions. The BSF has been modeled with FLUENT. Experimental measurements from the BSF compare quite well with those predicted by FLUENT, namely parameters such as gas temperatures and gaseous concentrations like O_2 and CO. Having validated FLUENT with BSF data, the intent is to use it as well as the CHEMKIN model in ways that capitalize on their respective strengths to evaluate and screen various firing system concepts.

Fundamental Scale Burner Facility (FSBF). The LEBS plan calls for evaluation of advanced coal reburning as a supplemental NO_X reduction technology. Reburning is classically thought of as a separate, downstream (from the primary combustor) zone into which "reburn fuel" is injected followed by a "burnout zone" where air is injected to burn out the remaining combustibles from the reburn zone, which typically operates at substoichiometric conditions. Reburning in the classical sense has been shown to be an effective technology for reducing NO_X; however, when used in the traditional fashion greater residence time is needed in the separate reburn and burnout zones. However, NO_X reduction through the reburning process can and does occur within the primary combustor. The objective of testing in the FSBF has been to characterize the NO_X and combustion performance from firing system concepts which do not have the classical, separate reburn and burnout zones, but rather which employ integrated strategies within the main windbox zone that take advantage of NO_X reduction through reburn process chemistry. The advantages are less residence time, a smaller furnace and a favorable cost impact. It is believed that tangential firing, specifically building upon the already-established TFS 2000™ system, is well suited for adaptation to the integrated firing system concept.

The Fundamental Scale Burner Facility (FSBF) is a horizontally fired experimental combustor which has a capacity of 5 million Btu/hr (350 Kcal/s). It has been configured to simulate tangential firing; air and fuel are injected from four nozzles for each plane, or elevation,

the term used to describe a plane in a tangential firing system. There are a number of planes from which fuel or air can be injected to simulate and evaluate a particular firing arrangement. Additionally there are air-only injectors downstream of the main windbox to simulate over fire air injection.

Low NO_X firing generally requires that the main windbox or burner zone be fired under substoichiometric conditions. Table 1 shows the relative NO_X values as a function of bulk stoichiometry in the main windbox zone as simulated in the FSBF. Configuration 1 represents a base case where all of the combustion air is injected through the main windbox; the NO_X level is arbitrarily shown as 100%. Configurations 2 and 3 show relative NO_X values for substoichiometric firing in the main windbox and with different amounts of Separated Over Fire Air (SOFA) in SOFA levels 1 and 2. As expected, substoichiometric operation results in lower NO_X and the strategy for staging the SOFA also makes a difference in the final NO_X levels.

Table 1. Relative NO_X Levels vs. Main Burner Zone Stoichiometry (MBZ) and Separated Over Fire Air (SOFA)

Config	NO_X%	MBZ Stoich	SOFA 1 Stoich	SOFA 2 Stoich
1	100	1.15	1.15	1.15
2	66	0.8	1.0	1.15
3	54	0.8	0.8	1.15

Initial testing in the FSBF was designed to evaluate a number of variables within the main firing zone, including firing system configuration and operating conditions, for their effect on NO_X. Table 2 shows some initial results from a number of firing system configurations, some of which employ integrated firing system strategy. Relative to the base case, configurations 4 and 5 are run to produce lower NO_X without the use of SOFA, while configurations 6 and 7 show relative NO_X levels with the use of SOFA. Testing in the FSBF is continuing.

Table 2. Relative NO_X Levels for Integrated Firing Configurations vs. Basecase (Configuration 1)

Config	NO_X%	MBZ Stoich	SOFA 1 Stoich	SOFA 2 Stoich
1	100	1.15	1.15	1.15
4	64	1.15	1.15	1.15
5	59	1.15	1.15	1.15
6	54	0.8	0.8	1.15
7	49	0.8	0.8	1.15

Coal Pulverization. As noted above, specification and control of coal particle size distribution is an important prerequisite for successful operation of a low NO_X firing system. Conditions for achieving low NO_X tend to run counter to those that are favorable for good coal combustion; therein lies the challenge. Paying attention to the proper coal particle size distribution has the obvious effect of facilitating better carbon burnout and the perhaps not-so-obvious effect of enhancing NO_X reduction through earlier release of nitrogen species in the near-burner zone, where the opportunity for conversion to molecular nitrogen is increased.

A Pulverizer Development Facility (PDF) was constructed for the study and characterization of coal pulverization and classification. The PDF includes a coal storage and feed system and a fine coal collection system as necessary support equipment for the pulverizer itself. The mill represents a commercial design, based on a size 323 bowl mill, but with the flexibility to change out important components within the mill, such as grinding elements and classifiers. The capacity of the PDF is about 3.5 tons/hr (3.2 tonnes/hr).

The early focus of the LEBS-related work which utilizes the PDF has been to characterize the coal particle size distribution and mill power requirements. Ideally it is desired that the top size of the coal particles be closely controlled and that classification is more efficiently carried out so that sufficiently fine particles are not recirculated needlessly back to the grinding zone of the mill. The use of a dynamic classifier is one way of accomplishing this.

Table 3 shows results from recent testing with various dynamic classifier designs as compared with a base case static classifier design. It is apparent that the goals of greater coal fineness, less coarse material and lower power requirements have all been achieved with at least two of the dynamic classifier designs. Results have been demonstrated with conventional air-coal ratios. Future testing in the FSBF will employ the use of coals having various particle size distributions to ascertain and quantify the benefits of using finer coal.

Table 3. Dynamic Classifier Characterization

	Static Class.	Dynamic Classifier Designation HP1	HP2	RB1	RB2
Size (wt%)					
+50 mesh	0.1	0.2	0.0	0.0	0.0
+100 mesh	2.4	1.2	0.6	0.5	0.6
-200 mesh	84.3	85.7	92.7	93.1	90.7
Power (%)	100	81	98	97	107

Stack NO_X, SO_2, Particulates and Title III Pollutants

General Description of Control Technology. Boiler outlet emissions will be controlled by a modified SNO_X™ process, referred to as the SNO_X™ Hot Scheme. The SNO_X™ process which simultaneously removes nitrogen oxides and sulfur oxides from flue gases, is a licensed technology developed by Haldor/Topsøe A/S, Denmark. The SNO_X™ technology has been demonstrated in several forms, one as a Clean Coal Technology, and has been constructed and operated on a commercial scale in Denmark. The SNO_X™ technology consists of five key process areas: particulate collection, NO_X reduction, SO_2 oxidation, sulfuric acid condensation, and acid conditioning. For the LEBS process, the particulate collection and NO_X reduction process are integrated into a single process step.

Particulate/NO_X Control. The first step, particulate collection, will have a direct effect on the performance of the downstream SO_2 converter, particularly the frequency of cleaning the SO_2 catalyst. This is due to the inherent ability of the catalyst to retain greater than 90% of all particulate matter which enters the converter. The collection of this particulate matter, over time, will cause the gas draft loss to increase. The virgin draft loss can, however, be restored through catalyst cleaning, called screening. Higher dust loads at the SO_2 converter inlet therefore require more frequent cleaning, and higher catalyst attrition losses. A target dust level of 0.0008-0.0016 lb/MMBtu (1-2 mg/Nm3) leaving the collector is desired. Consequently, dust emissions from the SO_2 converter are often an order of magnitude lower.[1]

To achieve the required particulate loadings at the SO_2 converter inlet, a high efficiency collection device must be employed. For the LEBS process, a ceramic filter manufactured by CeraMem will be employed. The construction of the ceramic filter is based on the use of porous honeycomb ceramic monoliths. These high surface area, low cost materials were developed for, and are widely used as, catalyst supports. The monoliths have many cells or passageways which extend from an inlet face to an opposing outlet face. Cell structure is usually square and cell density can vary from 25 to 1400 cells per square inch (cpi). Mean pore size can range from 4 to 50 microns.

The superior properties of commercially available monoliths make them ideally suited for applications requiring high thermal stability, mechanical strength, and corrosion resistance. These rigid ceramics have been used for years as NO_X SCR catalyst supports in combustion flue gas applications. The monolith structure used for catalyst support material is readily adapted to function as a particulate filter. The monolith structure is modified by plugging every other cell at the upstream face with a high-temperature inorganic cement. Cells which are open at the upstream face of the monolith are plugged at the downstream face. Flue gas is thereby constrained to flow through porous cell walls, and at appropriate intervals, the filter is cleaned by backpulse air.

CeraMem has developed the technology for applying thin ceramic membrane coatings to the monoliths and controlling the pore size. The thin (approximately 50 microns) membrane coating has a pore size approximately 100-fold finer than that of the monolith support. Thus the filter retention efficiency is determined by the membrane pore size, not the monolith pore size. The ceramic filter will operate as an absolute filter; that is, all particulate over a certain diameter will be removed from the gas stream. The split diameter is determined and controlled by the ceramic application.

In the LEBS process, commercially-tested SCR catalyst is applied to the clean side of the particulate filter. As with other low dust SCR applications, concerns about flyash poisoning of the catalyst are eliminated, and catalyst loadings may be reduced as the catalyst will have a "higher" activity. Also, in this application, the reaction kinetics will not be controlled by mass diffusion as in other monolith applications. Instead, the kinetics will be much faster, taking advantage of "forced diffusion", where the flue gas will come into forced contact with the catalyst as it passes through the monolith wall. A third benefit of this technology in relation to SCR performance will come about from elevated conversion temperature. Typical SCR applications operate at about 675°F (357°C), whereas the LEBS application will operate at a slightly higher temperature of 750-775°F (400-415°C). Increased temperature should not affect catalyst life, but should improve the efficiency of the reducing reagent, in this case ammonia. The increase in temperature should result in lower ammonia concentrations at the SCR outlet, often called slip.

[1] These levels are below normal detection limits of EPA Method 5 sampling. The method collection time would have to be extended to be able to detect these emissions.

Particulate and NO_x Emissions Levels. Taking advantage of the clean-side catalyst application, forced diffusion kinetics, and higher reduction temperature should allow for much higher reduction efficiencies and efficient reducing reagent consumption. Early data indicate that at NO_x inlet concentrations of 200 ppm, NO_x reduction should exceed 90% without any measurable ammonia slip.

In particulate collection tests, collection efficiency was found to be almost absolute, in most cases greater than 99.99996% with an inlet flyash loading of 4-5 lb/MMBtu (5-6 g/Nm^3). Outlet emissions could not be detected by standard EPA Method 5 techniques, and were determined to be less than 0.0000016 lb/MMBtu (0.0020 mg/Nm^3) by laser-light scattering instrumentation.

SO_2 Control. SO_2 emissions are controlled by the SO_2 oxidation catalyst, sulfuric acid condensers, and acid conditioning system. An oxidation catalyst, which is widely used in the sulfuric acid industry, converts the SO_2 to SO_3 at greater than 97% efficiency. The efficiency of the catalyst is not affected by presence of water vapor or chlorides in concentrations up to 50% and several hundred ppm, respectively. An additional benefit of the sulfuric acid catalyst is its ability to oxidize carbon monoxide and hydrocarbons present in the flue gas stream to innocuous compounds.

The SO_3 in the gas leaving the SO_2 converter is hydrated and condensed in two steps. First, the bulk of the SO_3 is hydrated to sulfuric acid vapor as the flue gas passes through the Ljungstrom® air heater and the temperature drops to approximately 500°F (260°C). At this point, the flue gas is still well above the acid dewpoint, thus avoiding acid condensation and corrosion of the ductwork. The flue gas then enters the WSA Condenser, a unique tube and shell falling film condenser with the boiler combustion air used as a cooling medium on the shell side. Borosilicate glass tubes are used to convey and cool the flue gas. In both steps, the hydration and condensation reactions are exothermic, thereby adding heat to the flue gas and subsequently to the boiler thermal system. The design and operation of the WSA Condenser make possible virtually complete condensation and capture of the sulfuric acid at concentrations of 92 to 95 wt %.

SO_2, SO_3 Emissions Levels. To this point, SNO_x™ systems have not been built with SO_2 removal efficiencies of greater than 95%, and therefore, data other than that obtained at laboratory scale would not support the ability to achieve higher removal efficiencies. However, ultra-high removal efficiencies (typically greater than 98%) have been studied, with the information being used to design, build, and operate high-efficiency systems. As this is a catalytic system, SO_2 removal efficiency is fixed and somewhat inflexible. If a system is designed for a specific removal efficiency, it will maintain that degree of control over a wide operating range without any drop-off, unlike chemical reagent systems which tend to become gas-side limited and lose removal capability as inlet SO_2 levels decrease. Increasing removal efficiency would require minor modification of the converter vessel with catalyst addition.

SO_3 emissions will be controlled by the efficient condensation system, in excess of 99.9% condensation. However, some SO_3 will pass through the system and will exit the stack, and it is expected that this amount would not be in excess of 20 ppm - a level similar to emissions from present-day wet or dry desulfurization systems.

Title III Pollutants. The Clean Coal demonstration facility was sampled as part of the DOE/EPA Field Chemical Emissions Monitoring. It was found that the SNO_x™ technology was able to reduce Title III metal emissions by greater than 98% and Title III organic compounds were not detected at significant levels. The commercial scale facility in Denmark was also sampled by an independent team, with the results reported confirming those obtained from the Clean Coal Project sampling.

Improved Thermal Efficiency. Heat addition, transfer, and recovery are of significant importance in the SNO_x™ process. The process generates recoverable heat in several ways. All of the reactions which take place with respect to NO_x and SO_2 removal are exothermic and increase the temperature of the flue gas. This heat is recovered in the air heater and WSA Condenser for use in the furnace as combustion air. Because the WSA condenser lowers the temperature of the flue gas to about 210°F (100°C), compared to the 300°F (150°C) range for wet and dry scrubbers, additional sensible heat is recovered along with that from the heats of reaction. (Although stack temperatures for wet and dry FGD systems range from 125-250°F (52-120°C), heat recovery - that done by the air heater - usually is limited to a minimum temperature of 300°F (150°C). After that, the flue gas is quenched, accounting for the temperature difference.) In comparison to an NSPS-compliant plant, 38% more heat is recovered from the flue gas stream

after the boiler, itself accounting for a 1.9 percentage point increase in the net plant thermal efficiency.

Waste And Byproducts

As shown in Table 4, unlike many other processes, the SNO_X™ process does not generate a waste product or intermediate. Also, the SNO_X™ process does not produce a "commercial grade" product which does not meet the specifications of its intended market, as has been the case with Wet FGD gypsum. The sulfuric acid produced by the SNO_X™ process meets or exceeds U.S. Federal Specification O-S-801E Class 1 and is commercially tradeable without limitation. The Project Team includes, as an advisor, a company which operates two sulfuric acid production facilities and distributes acid from several international involuntary acid producers. This advisor has provided very useful insight into the domestic sulfuric acid market. Installation of a SNO_X™ facility, or any large acid production facility, will force a reshaping of the local acid market, and alliances could be made with local brokers, suppliers, and consumers for distribution and consumption of the acid. It is believed by sulfuric acid market experts that domestic involuntary acid production could displace international involuntary acid production.

It is expected that the flyash from the LEBS system could be sold commercially, similar to present day ash disposal. Carbon content in the flyash is expected to be at an acceptable level and there is not expected to be any noticeable presence of ammonia.

On whole, it is expected that the amount of landfill material from an NSPS-compliant plant (ESP/limestone WFGD) will be reduced by approximately 85%, expressed on a heat input basis. This figure accounts for the FGD by-product, a wet mixture of calcium sulfite and calcium sulfate, being landfilled as opposed to the SNO_X™ product, commercial grade sulfuric acid, being sold. For every ton of sulfur in coal, 7.7 tons (7 tonnes) of landfill waste has been converted to 3.3 tons (3 tonnes) of sulfuric acid.

HIGH EFFICIENCY POWER CYCLES

Steam Cycle: The most widely used power plant cycle in the United States has been a subcritical single reheat cycle. It features a drum boiler operated to produce 2400 psig/1000°F (16.6 KPa/538°C) at the turbine throttle. In the late fifties, the industry introduced supercritical steam cycles which enabled higher plant efficiencies and improved operating costs. As the initial problems were resolved and supercritical technology matured, these plants demonstrated availabilities comparable to their subcritical counterparts. However, for a variety of reasons, but mainly due to the low cost of fuel, there have been no supercritical plants constructed in the United States since the late seventies. The original incentives for supercritical cycle development in the 1950's are even more critical today. The time has come to take a hard look at cycle options and improvements in heat rate through higher steam conditions. Heat rate improvement means reduced cost per unit of electricity produced. For over a decade, the authors' company, with the support from DOE and EPRI, has been participating in the development of an advanced steam cycle with throttle conditions of 4500 psig/1100°/1100°/1100°F (31.0 KPa/593°C/593°C/593°C). This plant is commercially available and includes state-of-the-art technical advances made in materials, manufacturing processes, design analyses, and control systems. Plants with very similar

Table 4. End Product and Disposition By Technology

Technological Advancement	Product and Disposition, Cost Comparison
1st Generation Technology - consumable reagent processes, usually sodium- or calcium-based, such as lime/limestone Wet FGD, lime Dry FGD, limestone furnace injection, and duct injection.	Landfill of sulfite/sulfate compounds with little commercial or industrial value. Calcium sulfate from wet FGD can be upgraded to commercial-grade gypsum, but at significant cost. Low capital cost, offset by high O&M cost.
2nd Generation Technology - regenerable reagent processes, such as CuO and MgO systems.	Produces chemical intermediate, usually metallic sulfide or sulfite, which must be landfilled or further processed to produce sulfuric acid or elemental sulfur. High capital cost and O&M cost.
3rd Generation Technology - catalytic (no reagent) technologies, such as SNO_X™ process.	Direct production of elemental sulfur or sulfuric acid. High capital cost, offset by low O&M cost.

steam conditions are in successful commercial service in Japan and Denmark (where high efficiency has greater value.) Depending on the condenser pressure, plant capacity, and type of coal-fired, the net plant HHV efficiency is approximately 41% to 43%. Although the steam conditions may appear to be advanced, they do not constitute a significant departure from the current experience. One may only need to recall the Eddystone unit of the Philadelphia Electric Company which was commissioned in 1959. With initial steam conditions of 5000 psig (34.4 KPa), 1200°F (649°C) and two reheats of 1050°F (566°C), Eddystone I had the highest steam conditions and efficiency of any electric plant in the world. Due to some initial problems, very few of which were related to high temperature and pressure, the steam turbine throttle conditions were reduced to 4700 psig (32.4 KPa) and 1130°F(610°C). It remains an important unit in Philadelphia Electric's future generation plan as evidenced by life extension beyond the year of 2010. However, in contrast to the Eddystone unit which was designed for base load capacity needs, the state-of-the-art plant would be capable of sliding pressure mode of operation and cycling duty with fast start-up and fast load change rates. These desired plant characteristics are accommodated by introducing a steam generator with spirally wound furnace walls, an integrated start-up system, and a split back pass for steam temperature control. The past experiences are factored into the design of critical components. Major design improvements include improved materials such as advanced ferritic alloys as T91 (9Cr) and modified 12 Cr for piping, headers, and steam turbine rotors. Better analysis techniques combined with advanced monitoring and control systems ensure that the state-of-the-art plant would be able to operate without any loss of material or component life over and above that expected from current units.

Higher steam conditions, such as 5000 psig/1200°/1200°/1200°F (34.4 KPa/649°C/649°C/649°C), offer the prospect of an additional plant efficiency improvement of approximately 3%. The estimated net plant efficiency is in the range of approximately 42% to 44%. Design of the high temperature components is not expected to change significantly from the state-of-the-art plant except for some material upgrade in the critical areas. For base load capacity, technology is probably available to build this plant today, particularly, if the reheat temperatures are reduced to 1150° or 1100°F (621° or 593°C). For cycling duty, the key to success lies in the application of advanced high strength ferritic and austenitic alloys developed in the past decade for such critical components as furnace wall tubing, headers, piping, and steam turbine rotors. It is believed that with some additional R&D effort the 5000 psig (34.4 KPa) steam cycle can be offered commercially in the 2000 to 2002 time frame.

Significant additional thermodynamic gain can be achieved by adopting even higher steam conditions such as 6000 psig/1300°/1300°/1100°F (41.3 KPa/704°C/704°C/593°C). The expected net plant efficiency should be in the range of 43.5% to 45.5%. Since these steam conditions fall outside the realm of the current experience, there is little doubt that formidable technical problems will need to be solved. To meet the future needs for high efficiency, the industry is beginning to experiment with high steam temperature applications. Conceptual designs and preliminary test results at steam conditions of 1500 psig/1500° F (10.3 KPa/816°C) have been reported in the literature. To facilitate implementation of the new technology consistent with the needs of the early 21st century, perhaps the time has come for comprehensive assessment of the ultra high steam conditions.

Kalina Cycle. An alternative approach to the use of higher temperatures and pressures to gain Rankine cycle plant efficiency is to change the cycle working fluid. The use of mixtures as the working fluid provides the ability to vary the composition throughout the cycle. This realizes a structural advantage in designing a power plant cycle by providing a degree of freedom to minimize thermodynamic losses throughout the process. The Kalina cycle, currently under demonstration, is one such cycle.

In the Kalina cycle a mixture of ammonia and water is used as the working fluid. In contrast to a single component, the temperature of the ammonia/water working fluid continually changes during the boiling process. The light component (ammonia) boils off first, leaving behind a mixture with a greater concentration of the heavier component (water). As this occurs, the boiling temperature of the remaining liquid increases. This fundamental degree of freedom facilitates the minimization of thermodynamic losses.

For direct fired Kalina cycle applications (those where the source of thermal energy input to the cycle comes from fuel combustion) net plant efficiencies in the range of 45% to 50% (HHV) are possible today. This range can be achieved at vapor conditions of 2400 psig/1050°F/1050°F/1050°F (16.5 KPa/566°C/566°C/566°C). Similar to the steam Rankine cycle, increasing vapor temperatures will augment the efficiency advantage of Kalina cycles.

Kalina cycle plants can take advantage of all LEBS technological advances in combustion and emissions control. The plant cycle may be structured to accommodate the

application of the SNO_X™ Hot Process, offering substantial efficiency improvement versus the conventional Rankine cycle. Finally, because the efficiency gains are a result of structural improvements in the plant cycle, the capital cost of the plant may be less than a conventional Rankine subcritical single reheat plant.

COMMERCIAL GENERATING UNIT DESIGN

The Team's 400 MWe (nominal) Commercial Generating Unit (CGU) illustrated in Figure 1 is an adaptation of a conventional pulverized coal-fired steam-electric plant. It will be compared to a Kalina design under a separate work effort. For each design, selected technologies have been introduced to achieve greatly reduced levels of emissions, increased thermal efficiency, reduced waste and improved costs. These technologies involve primarily three areas:

- An advanced low-NO_X combustion system.
- The SNO_X™ Hot Process.
- Advanced supercritical boiler and turbine cycle.

This combination of emission control processes meets or betters all of the target emission levels for the LEBS Project, while producing either benign or saleable by-products from the gas treatment. The advanced cycle and the SNO_X™ Hot Process enable the design to meet the efficiency objective and, indirectly, the cost of electricity objective. Expected performance of the CGU compared to an NSPS-compliant plant is listed in Table 5. The NSPS plant assumes a 2400 psi/1000°/1000° (16.6 KPa/538°C/538°C) cycle with wet limestone FGD and an electrostatic precipitator.

Table 5. Emissions Reduction Performance

		NSPS PLANT	LEBS CGU
SO_2,	lb/mm Btu*	0.60	0.10
NO_X,	lb/mm Btu	0.60	0.02
Particulate,	lb/mm Btu*	0.030	0.002
Total Waste,	LB/kWh	0.352	0.117
Net Efficiency (HHV),	%	35.4	45

* 3 lb S and 15.4 Lb ash per million Btu in the coal.

Volatile organic emissions, CO and ammonia slip will be oxidized in the SO_2 oxidizer and there will be no visible stack plume. The CGU produces significantly less waste than the NSPS plant. Part of this is due to the lower amount of ash produced per kWh because of the higher efficiency cycle and the SNO_X™ Hot Process. The major portion of this reduction results from the production of sulfuric acid as a commercially saleable by-product rather than the sludge normally generated by an FGD system. The plant uses a 5500 psig,/1300°F (37.9 KPa/704°C) supercritical cycle with two reheat streams. The gross output of the generator is 468 MWe and the net plant output is 445 MWe.

The CGU will satisfy the objective of having a cost of electricity equal to or less than that for the NSPS-compliant plant. The calculated cost of electricity is reduced by the by-product credit received from the sale of the sulfuric acid (using a figure confirmed by an outside market study) and by an aggressive but achievable capacity factor. An independent reliability, availability and maintainability analysis was completed for the CGU. The study was based on performance data obtained from the NERC data base and utilized the industry accepted "Delphi" process to adapt the data for the CGU. One reason enhanced reliability and equivalent availability are achieved is that the SNO_X™ Hot Process is "passive", i.e., it has far less mechanical equipment than is typically found in flue gas desulfurization processes that utilize lime or limestone. The simpler process, absence of mechanical equipment, and the passive character of the process results in higher reliability and availability. The design also incorporates advanced diagnostics concepts which provide early warning of impending failures in the plant equipment. This advanced knowledge has several benefits that result in improved reliability and availability.

Finally, the CGU will have good access and ease of maintenance because it was designed for good access and ease of construction. The plant is laid out with the "ranch" concept, *i.e.*, the stacking of equipment is minimized. Rather, it is spread out in the horizontal plane. In addition, the plant design incorporates a "backbone" utility rack for piping, cable, conduit and electrical wiring. The ground level portion of this rack is used as a maintenance access corridor that runs throughout the plant. Also, organizing piping and conduit on overhead racks provides more ground level access to equipment for maintenance. Incorporating these features in the design of the plant, and coupling them with the implementation of a "design for maintainability" approach during the detailed design stage, will result in a plant with superior availability and higher capacity factor which helps reduce the cost of electricity.

CONCLUSIONS AND FUTURE WORK

All of the foregoing are responsive to the technical, regulatory and economic needs of the power generation industry. The advanced performance of the ABB Team's LEBS technologies coupled with efforts to minimize investor risk should make it extremely attractive to the utilities and IPPs. The near term character of the LEBS technologies chosen, coupled with the attractive performance and cost features of the CGU, support a confidence in the Project Team that the proposed CGU design will be acceptable and marketable.

REFERENCES

1. Regan, J. W., et al, 1994, "Development and Design of an Advanced Low-Emissions Boiler System", presented at the International Joint Power Generation Conference, Phoenix, AZ.

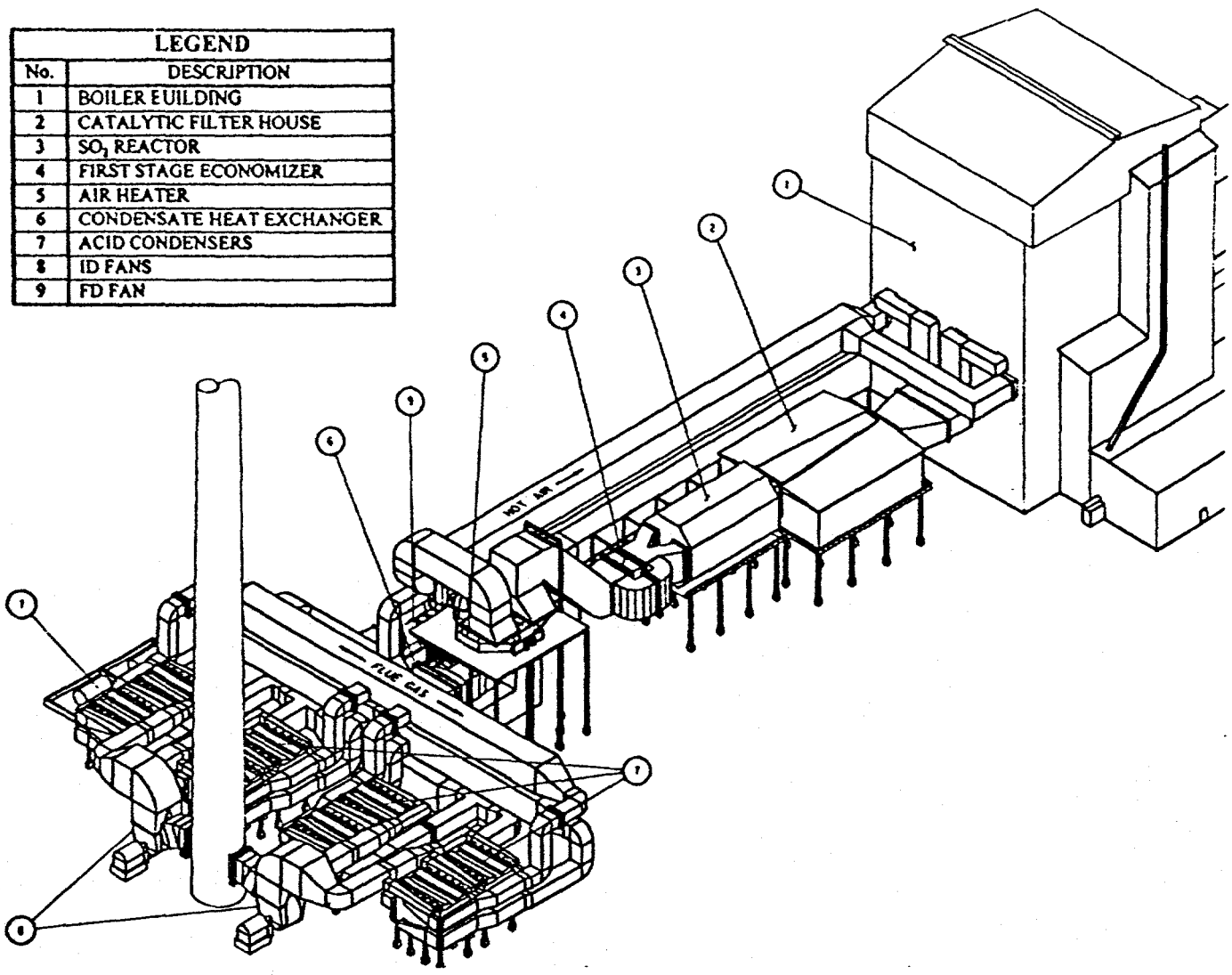

LEGEND	
No.	DESCRIPTION
1	BOILER EUILDING
2	CATALYTIC FILTER HOUSE
3	SO_2 REACTOR
4	FIRST STAGE ECONOMIZER
5	AIR HEATER
6	CONDENSATE HEAT EXCHANGER
7	ACID CONDENSERS
8	ID FANS
9	FD FAN

Figure 1 - 400 MWe Plant

DISCLAIMER

This report was prepared as an account of work sponsored by an agency of the United States Government. Neither the United States Government nor any agency thereof, nor any of their employees, makes any warranty, express or implied, or assumes any legal liability or responsibility for the accuracy, completeness, or usefulness of any information, apparatus, product, or process disclosed, or represents that its use would not infringe privately owned rights. Reference herein to any specific commercial product, process, or service by trade name, trademark, manufacturer, or otherwise does not necessarily constitute or imply its endorsement, recommendation, or favoring by the United States Government or any agency thereof. The views and opinions of authors expressed herein do not necessarily state or reflect those of the United States Government or any agency thereof.