Scientific Computing for National Security

A Transforming Technology:
The Roadrunner System at Los Alamos National Laboratory

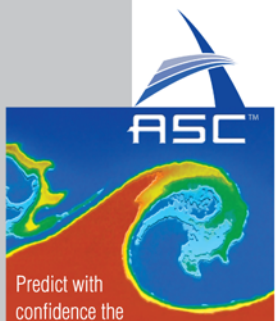

Predict with confidence the behavior of complex systems through comprehensive, science-based simulations

The National Nuclear Security Administration (NNSA) and Los Alamos National Laboratory (LANL), Los Alamos, New Mexico, in partnership with IBM, are developing and deploying the Roadrunner High Performance Computing system.

Vision for Roadrunner

- Provide petascale resources for predictive science-at-scale simulations.
- Lay the groundwork for future systems that will open new horizons for simulation performance.

Goals for Roadrunner

- Provide a large production capacity computing resource for the Stockpile Stewardship Program.
- Implement a hybrid accelerated architecture capable of supporting NNSA's future workload.
- Lead an industry-wide technological revolution in HPC.

Three Phases

The Roadrunner project will be implemented in three phases.

Phase 1 system delivery is now complete. LANL acquired, installed, and deployed more than 71 teraFLOPS of a base system to provide capacity computing cycles in September 2006.

Phase 2 includes a technology refresh with improved hardware and software with IBM Cell blades and Cell software for assessment of the final system.

Phase 3 is the option to build the final hybrid architecture system dependent on a favorable outcome from technical and programmatic evaluations. This hybrid architecture consists of over 3,000 integrated hybrid nodes that include Advanced Micro Devices (AMD) Opteron processors with attached Cell processors.

Roadrunner Base System

The Roadrunner base system has been used for capacity computing since December 2006.

Today's operating Roadrunner base system has 14 Connected Units, each built from 144 Opteron X64 processors from AMD, connected with a high-speed InfiniBand 4X interconnect fabric. The system also includes initial test beds of the Cell Broadband Engine, predecessor of the enhanced Double Precision (eDP) computer chip to be used in the Roadrunner final system. These test beds are for initial work on applications software and systems software to prepare for the optional hybrid system in Phase 3.

Roadrunner Hybrid Architecture

The hybrid architecture of Roadrunner's third phase — due in the summer of 2008 — contains IBM Cell Enhanced Double Precision (eDP) processing elements directly connected to AMD Opterons via PCI-E x8. Roadrunner is expected to contain ~13000 IBM Cell eDP microprocessors, the same family of processors used in the Sony PlayStation 3. At the highest level, the Phase 3 Roadrunner Final System is a very large cluster of nodes or servers linked together by a high-speed interconnect. Each compute node in this cluster is itself a heterogeneous computing platform in that a compute node consists of four general-purpose microprocessor cores and four highly capable chips of a completely different advanced and proprietary architecture.

Advanced Simulation & Computing™

Roadrunner Hybrid Architecture
continued

The node-attached Cell accelerators is what make Roadrunner different than typical clusters. The Roadrunner Final System is Cell-accelerated, not a cluster of cells. Cells are added to each individual node.

The flow of data within both the hybrid node and the eDP chip is an essential element of the programming strategy for Roadrunner.

To this end, LANL and IBM are jointly developing a hybrid system programming model that will be used first in Roadrunner and will also provide an effective API for future hybrid systems.

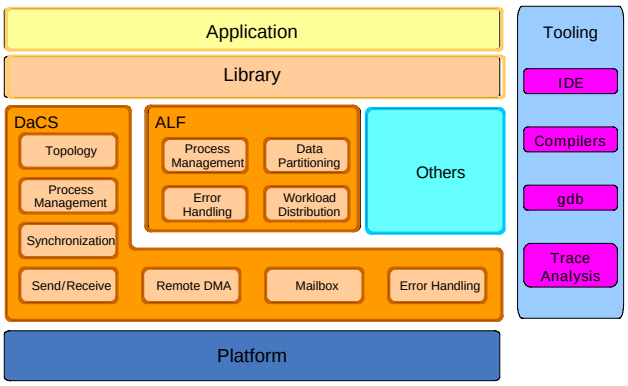

The software architecture is an essential element of Roadrunner.

The Data Communication and Synchronization Library (DaCS) and Accelerator Library Framework (ALF) are flexibly designed to address issues for a variety of architectures.

More broadly, Cells, GPUs, FPGAs, and many-core chips represent a technological revolution in HPC. Feeding the voracious appetites of the floating point units will become the foremost concern for the HPC programmer of the future.

Thus, the final hybrid system will be the first, large-scale example of the future of high-end computing.

For more information, visit http://www.lanl.gov/roadrunner and the Los Alamos National Laboratory booth at SC07, #1636.

The Science Promise

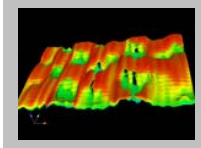

Petascale hybrid multicore systems are expected to contribute to a diversity of scientific fields ranging from biological to cosmological applications. The first target for the Roadrunner system will be to elucidate key elements of basic physical processes through first principles calculations. For example, the Roadrunner system will enable previously impossible simulations in numerous areas of plasma physics.

For instance, first principles, kinetic, three-dimensional studies of laser-plasma instability inside cavities that form during inertial confinement fusion, a problem of central importance to achieving fusion ignition at Lawrence Livermore National Laboratory's National Ignition Facility, will be possible. Likewise, fully resolved — spanning relevant length and time scales — first principles three-dimensional simulations of magnetic reconnection, the biggest unsolved problem in plasma physics and a problem with applicability ranging from astrophysics to magnetic fusion devices, are within reach. Other topical areas within reach of this capability include ultra-intense laser-matter interaction, space and astrophysical plasmas, shocks, radiographic source modeling, plasma turbulence, and thermonuclear burning plasma media.

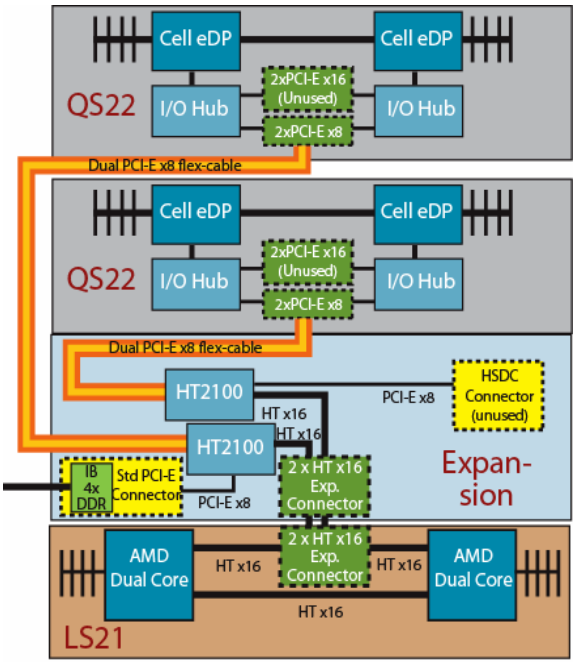

Roadrunner architecture is based on the triblade. On the triblade there will be one LS21 blade and two QS22 blades. The QS22 is a future IBM Cell blade, containing two new enhanced double-precision Cell chips.

LA-UR-07-7644