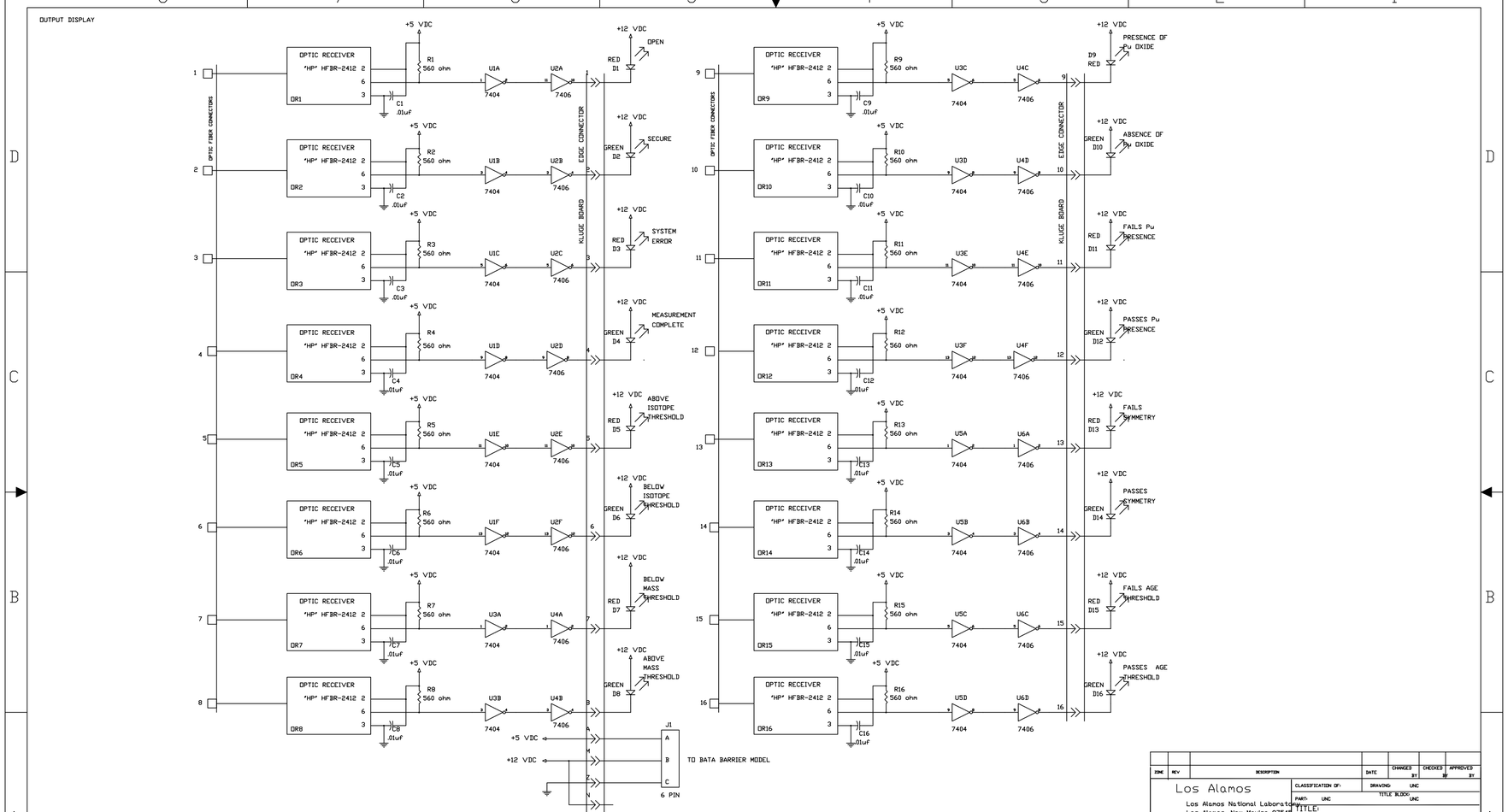

ZONE	REV	DESCRIPTION	DATE	CHANGED BY	CHECKED BY	APPROVED BY

Los Alamos

Los Alamos National Laboratory
Los Alamos, New Mexico 87545
Non-Proliferation and International Security
NIS-6

CAD FILE NAME:
FMTTD SYSTEM30-OUTPUT DISPLAY-128Y-271036-07

CLASSIFICATION OF: DRAWING: UNC
TITLE BLOCK: UNC
PART: UNC

TITLE:
FMTTD SYSTEM
OUTPUT DISPLAY
WIRING DIAGRAM

	SIGNATURE	DATE	GROUP
ORIGINATED	MACARTHUR	11-04-99	NIS-6
DRAWN	DRANSFIELD	11-04-99	NIS-6
CHECKED	-	-	NIS-6
PROJ. ENGR.	-	-	NIS-6
APPROVED	-	-	NIS-6
RELEASED	-	-	NIS-6

SCALE: NONE
TOTAL SHEETS:
DRAWING NO: 128Y-271036
SIZE: D
SHEET NO: 7