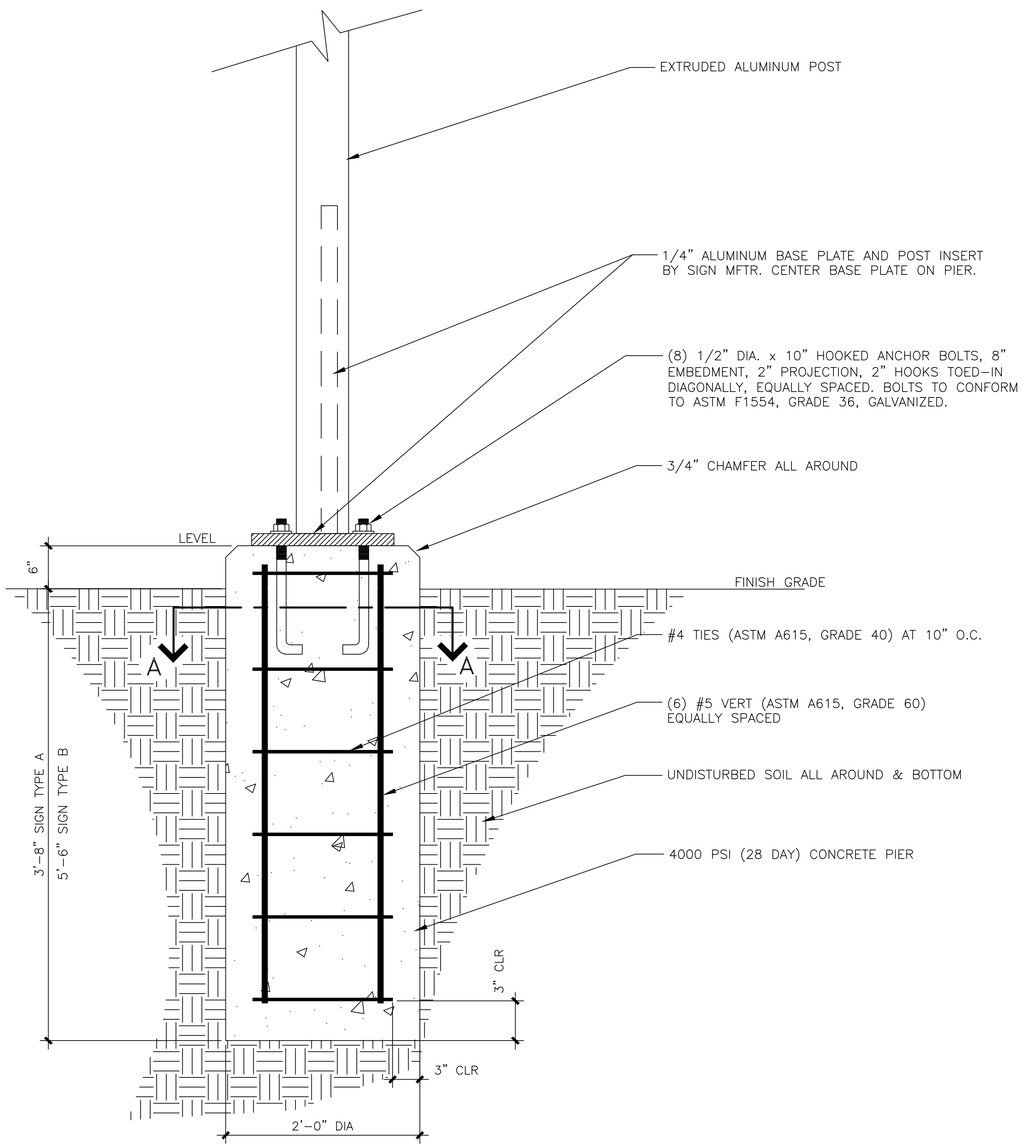

BASE DETAILS

NO SCALE

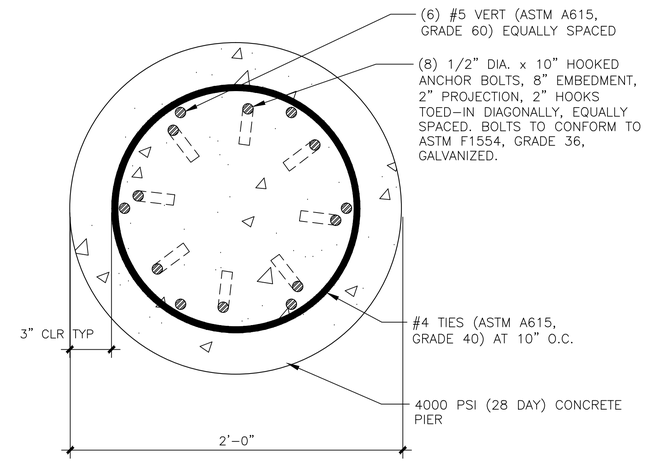

SECTION A–A

NO SCALE

NOTES TO DESIGNER:
(DO NOT INCLUDE ON CONSTRUCTION DRAWINGS)

1. COORDINATE WITH LANL MASTER SPECIFICATION 10 1405.

2. SIGN TYPES
TYPE A – FACE AREA <= 24 SF & VERT CENTER OF GRAVITY <= 3'-6" ABOVE BASE. (EX: FREESTANDING BUILDING SIGN – VARIES DEPENDING ON SIGN TEXT AND LAYOUT).
TYPE B – FACE AREA <= 42 SF & VERT CENTER OF GRAVITY <= 5'-6" ABOVE BASE. (EX: FREESTANDING TECHNICAL AREA SIGN – VARIES DEPENDING ON SIGN TEXT AND LAYOUT).

3. DRAWING DEVELOPED FOR ML-3/ML-4 PROJECTS. FOR ML-1/ML-2, ADDITIONAL REQUIREMENTS AND QA REVIEWS ARE REQUIRED.

4. SUPPORTING CALCULATION = CAL-012-03-1414-0012-S

NO	DATE	CLASS REV	DC	DESCRIPTION	DWN	DSGN	CHKD	SUB	APP
1	8/30/12	UNCL	EJS	REVISED FTG DETAILS	SR	SK	RT	DC	TO

ENGINEERING STANDARDS PROGRAM

ENGINEERING STANDARDS MANUAL

SIGN BASE DETAIL AND ALTERNATE

BLDG X TA-X

DRAWN	R. PEARSON
DESIGN	S.RICHARDSON
CHECKED	R.TROUT
DATE	5-17-04

SUBMITTED
DISCIPLINE POC: SCOTT RICHARDSON

APPROVED FOR RELEASE
STANDARDS MANAGER: TOBIN ORUCH

Los Alamos NATIONAL LABORATORY
PO Box 1663
Los Alamos, New Mexico 87545

SHEET 9
9 OF 9

CLASSIFICATION: U
REVIEWER: ED SEAWALT
DATE:

PROJECT ID: CHAPTER 4
DRAWING NO: ST-G2040-4
REV: 1

NEWDATE