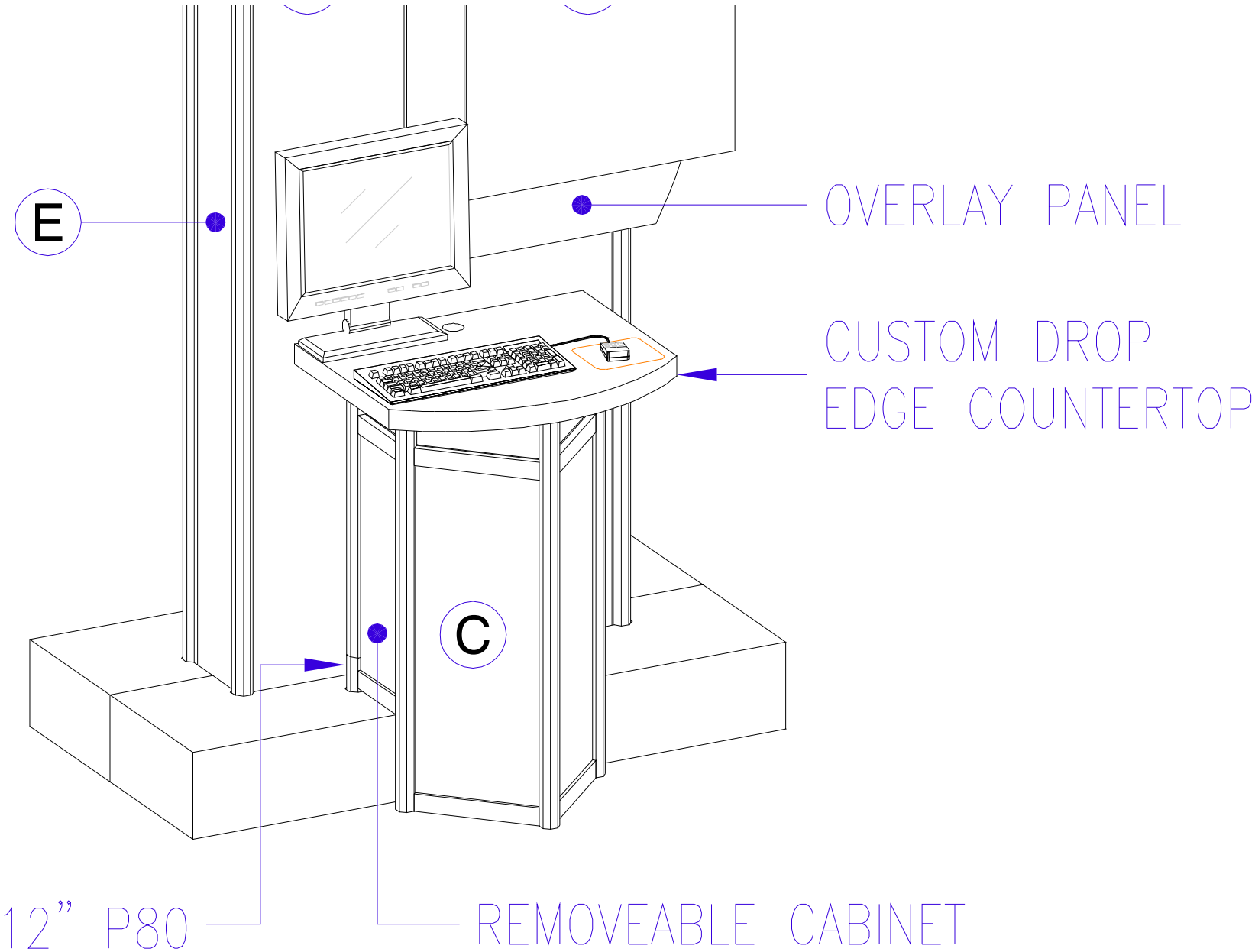
E
OVERLAY PANEL
CUSTOM DROP
EDGE COUNTERTOP
C
12" P80
REMOVEABLE CABINET

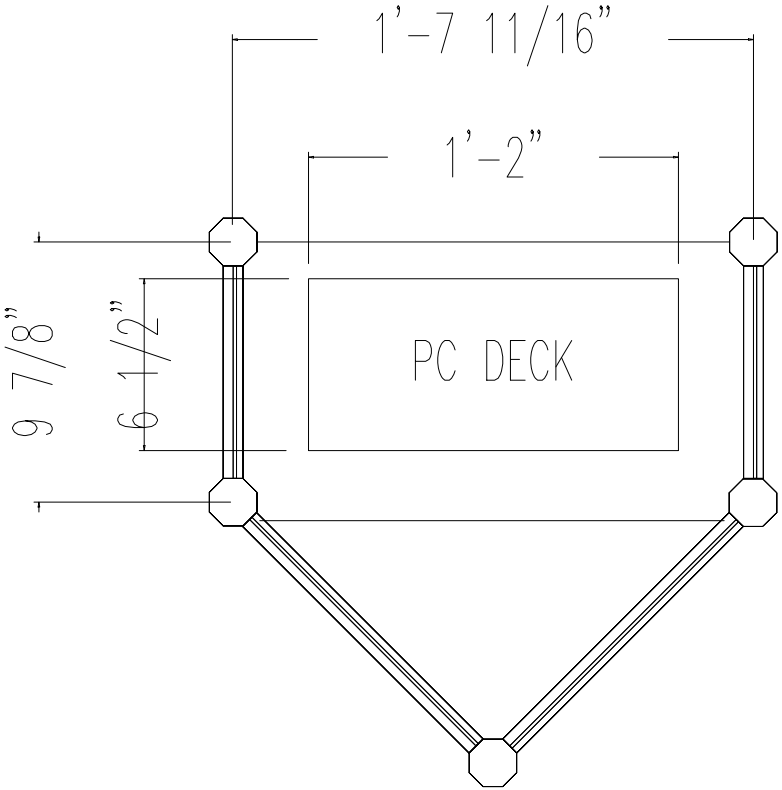
1'-7 11/16"
1'-2"
PC DECK
9 7/8"
6 1/2"