BIW10 Preprint -- Edited; preliminary green dot status
Final version will appear on JACoW

THE COPPER FREE FERMI TIMING SYSTEM: IMPLEMENTATION AND RESULTS

M. Ferianis, A. Bucconi, G. Gaio, G. Mian, M. Predonzani, F. Rossi
Sincrotrone Trieste S.C.p.A. ELETTRA, Trieste, Italy

Abstract

With respect to its timing system, FERMI@Elettra is the first "copper free" FEL facility. Having been conceived during the FERMI Technical Optimization Study (TOS), the FERMI timing system is based on the original ideas developed at MIT/DESY and at LBNL, which have been demonstrated also with the significant support of Sincrotrone Trieste. Since then, at FERMI, a young though strong team has been growing in time and is now running the system on the facility. As for the trigger distribution we have adopted the COTS solution by Micro-Research Finland Oy, the main original contribution to the Community is found in the phase reference generation and distribution. The huge engineering effort afforded by the FERMI@Elettra project in the last twelve months has produced a unique system that is now ready to assure a stable seeded FEL operation. The current system implementation is presented here along with the obtained performances, at the few tens of femto-second (fs) level (jitter and drifts).

INTRODUCTION

FERMI@Elettra is the fourth generation synchrotron light source currently under commissioning in Trieste [1,2], Italy. Being based on a seeded Free Electron Laser (FEL), it requires state of art timing and synchronization.

Given the electron bunch length and seed laser pulse duration, both in the tens of fs range, the specifications of the timing system are very demanding as the whole machine stability requirements are. When the FERMI@Elettra project officially started, back in 2006, there were laboratory experiments on optical timing systems showing possible solutions to meet these challenging small values, jitter having been addressed first. It was common believe that only newly developed optical techniques could meet the target jitter (<<100fs).

Collaborations were started in 2006 and 2008, with the Research Laboratory of Electronic (RLE) at MIT [3], Cambridge MA-USA, and with the Center for Beam Physics at the LBNL, Berkeley CA-USA, respectively.

Furthermore, a European expert group on fs timing systems [5] also grew during the FP6 EUROFEL Design Study [6], coordinated by DESY. In this joint effort, 16 European organisations developed some of the key technologies required for the design and construction of next generation free electron laser (FEL) sources.

After having analyzed the timing system specifications for a single bunch FEL, the *hybrid* timing system has been proposed for FERMI@elettra, adopting both the *pulsed* and *continuous wave* (CW) optical timing [2].

The rationale for this original approach is in that the synchronization schemes, adopted to phase lock different systems, are some based on an optical pulsed phase reference (like an optical cross-correlator or an electro-optical bunch arrival monitor) and some based on a CW one (like the low level radio frequency system). A fs jitter measurement laboratory has been also set-up as well as demonstrators of both pulsed and CW systems.

THE FERMI TIMING SYSTEM

In figure 1, the basic block diagram of the FERMI@elettra timing system is presented.

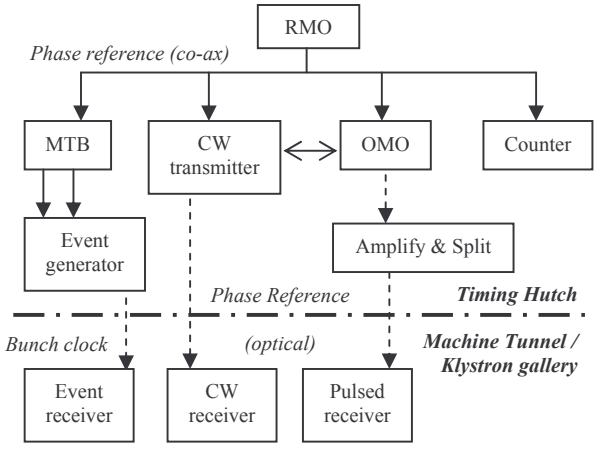

Figure 1: basic block diagram of the FERMI timing system. Solid lines indicate coaxial cables; dashed lines, optical fibres.

Primarily, the FERMI@elettra timing system generates and distributes throughout the facility the phase reference signal which all synchronized sub-systems (*timing clients*) are locked to. The frequency of the phase reference master oscillator is the same of the S-band accelerating structures in the linear accelerator (Linac). The phase reference information is transferred to the *clients*, either using an optical pulse train, generated in the Optical Master Oscillator (OMO) or a CW signal encoded onto an optical carrier (CW optical transmitter), actively stabilized fibre optics links being used for both systems.

The FERMI@elettra timing system also generates the bunch clock (up to 50Hz) and the laser *coincidence* clock (f_{COIN}=S-band÷38=78.895MHz) which is used to align the pulses from the different laser oscillators in the facility. The master time base (MTB) is implementing this task.

The bunch clock is then distributed throughout the whole facility, over fibre optics cables, by means of the *Event system* of Micro Research Finland Oy [7].

As a result, both the phase reference and the auxiliary signals are distributed using fibre optics (*copper free* timing system) which to our knowledge is a world premiere for synchrotron radiation facilities.

The timing hutch

The FERMI@elettra timing system presents a star topology. The centre of the star is the *timing hutch*, a dedicated laboratory where all the timing system equipments are located and where the optical cables start from. The timing hutch is next door to the photo-injector laser, on the same level of the Linac tunnel.

The main equipments located in the timing hutch are:

- the reference microwave oscillator (**RMO**)
- the pulsed optical master oscillator (**OMO**)
- the pulsed optical amplifier and splitter
- the pulsed links stabilization system
- the CW phase reference sender
- the master time base (**MTB**)
- the Event generator (**EVG**)
- the patch panels of the fibre cabling

The timing hutch has started operation in July 2009, for the 1st commissioning period of FERMI@elettra.

The reference microwave oscillator

The reference micro-wave oscillator is a 3GHz oscillator (f_{RMO}=2,998010GHz) specifically developed for FERMI@elettra by the German company Inwave [8]. The outputs of 4 locked 125MHz oscillators are multiplied to provide 1GHz signal which is then multiplied times three. The 3GHz signal is amplified and filtered; a passive splitter provides the six RF outputs, with +15dBm each.

Due to the aging of the crystals, some tunings of the RMO have been carried out during first operation period

PHASE REFERENCE SYSTEMS

In a Linac-based FEL facility, the main systems calling for fs synchronization are:

- the Linac (klystrons and accel. structures);
- the lasers: photo-injector, seed and user's ones;
- the longitudinal diagnostics;

The phase reference generation and distribution systems are responsible for remotely providing the phase reference at the femto-second level.

The optimum phase reference system depends, to some extent, on the synchronization schemes to be adopted for the above cited systems. The radio frequency (RF) amplifiers (klystrons), used to feed the accelerating structures of the Linac, are phase and amplitude stabilized by means of Low Lever RF (LLRF) systems. These systems are quasi-CW and adopt a CW phase reference. On the other hand, optical cross-correlators normally phase lock at the fs level two laser oscillators. These systems adopt as a phase reference signal a train of optical pulses [9]. Furthermore, new longitudinal diagnostics techniques have been proposed and on-field demonstrated, again based on the pulsed optical phase reference [10].

It is also worth mentioning here how the required phase noise may differ for the cited systems; for FERMI [11], the values range from the <70fs_{RMS} of the Linac accelerating voltage to the <15fs_{RMS} of the seed and user lasers; same applies for the drift (8h.).

Phase noise integration interval

When specifying and measuring the phase noise, the offset frequency integration interval needs to be carefully chosen [12]. Typically, different intervals are appropriate for different machines, being primarily related to the time structure of the beams. The time structure (single bunch or pulse train, repetition rate) together with the total (gun to experimental station) physical extension of the facility defines its *time of flight*, i.e. the minimum time interval over which the phase needs to be ultra-stable.

Plugging in the numbers of FERMI, a single bunch machine with a 50Hz maximum repetition rate and a total extension (gun-to-experimental station) of <300 meters, the time of flight results to be <1μs. Therefore, including some margin for the stabilization loops, any variation of the phase reference slower than 1ms is not relevant. As a consequence the phase noise integration interval has been set from 100Hz to 10MHz of the offset frequency.

The pulsed optical phase reference system

The pulsed optical phase reference system is represented in figure 2. The optical master oscillator (**OMO**) is a *soliton* fibre laser [13] working at a repetition rate of 157.790MHz (S-band÷19). Two modules are provided for its phase locking to the phase reference signal: a conventional *Fast Photo-Diode-Phase Detector* (**FPD-PD**), used also to select the OMO relative phase respect the RMO, and an innovative *Balanced Optical Micro-wave-Phase Detector* (**BOM-PD**), designed by the group at MIT [14], specifically engineered for FERMI by MENLOSYSTEMS gmbh [15]. To minimize the system downtime, a redundant easy-to-swap pump diode has been included. The optical signal of the OMO, amplified by an Er-doped Fibre Amplifier (EDFA), is split (8 ways) to feed the link stabilization (FLS) units (6). One output goes to the CW to pulsed locking units.

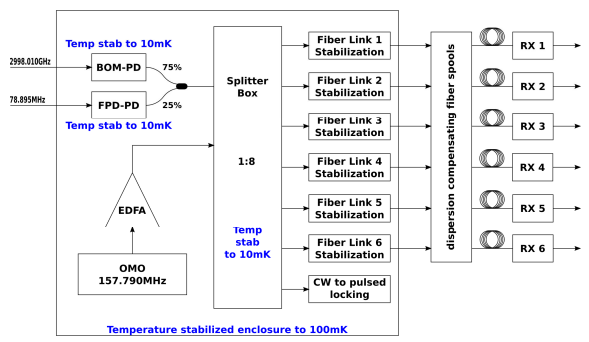

Figure 2: pulsed optical phase reference system; the components, inside the box on the left, are temperature stabilized to 0.1°K (the splitter box down to 0.01°K).

The path between the OMO and each FLS is entirely in fibre; the dispersion compensation assures the shortest pulses in front of the link cross-correlators. Each splitter output port provides ≈40mW of power with an average FWHM of 165fs (figure 3) and 30nm of bandwidth.

Each FLS unit implements a link stabilization scheme based on a single type-II phase-matched PPKTP crystal

[16] which is used as a phase detector. The path length variations are actively compensated by the combined action of a piezo-mirror, on the short time scale, and a motorized translation stage, for the drifts.

The system components, up to the FLS units, are installed in the timing hutch in a temperature controlled box, stable to 0.1°K; the *splitter box*, inside the same box, is stable down to 10mK.

The loop electronics implements a PID controller, interfaced to the control system, driven by the error signal generated from the pulse overlap.

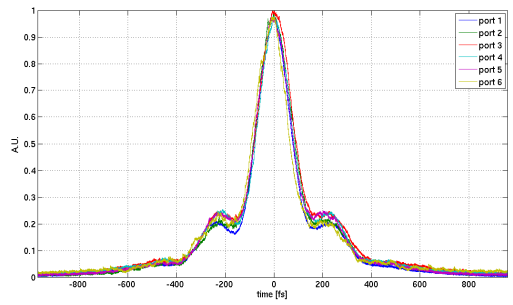

Figure 3: autocorrelation traces at the splitter ports.

At the remote end of the stabilized link there is the receiver composed of an electro-optic module, containing the link amplifier used to overcome the losses along the link, and a separate passive reference-head where a 10% reflecting *Faraday Rotator Mirror* is installed. The link stabilization is performed up to this point, resulting in a highly flexibility and compact solution.

The clients of the optical pulsed phase reference system are the lasers and the longitudinal diagnostics. The optical pulse train is used to synchronize a remote laser oscillator either by direct conversion (coarse locking) or using optical techniques (fine locking).

In the Bunch Arrival Monitor (BAM) [10, 17], the pick-up signal generated by the electron beam amplitude modulates the distributed OMO pulses used. In the Electro-Optical Sampling (EOS) station the local fibre laser oscillator is also phase locked to the OMO pulses.

As of today, the foreseen pulsed timing clients are:

- Photo-injector laser oscillator;
- Seed laser oscillator;
- EOS fibre laser oscillator;
- User laser oscillator;
- two BAM stations (at Laser Heater and BC1);

An increase of the client number is possible and it has been considered as a future option.

The Continuous Wave (CW) phase reference

The relative time stability of the different RF plants of the Linac is a key element to the overall stability of the accelerator i.e. to the quality (energy spread) of the electron beam. Such a relative stability is achieved by adopting a specifically designed LLRF system, typically one station for each klystron, and by feeding the LLRF stations with an ultra stable phase reference signal.

At FERMI, the LLRF system based on the original LBNL design [18] has been tested in March; tests have been performed on a FERMI klystron to cross-check the performances of the whole system.

In the LBNL system, the distribution of the phase reference is accomplished by means of CW optical links [19] where the phase reference signal is encoded onto an optical carrier. Peculiar to this design, a novel concept has been adopted where the drift of the link is measured with fs accuracy, but is not compensated for. Rather, the measured drift value is periodically added as a digital delay in the LLRF loop. By doing so, any moving part has been omitted for improved reliability.

The CW to pulsed phase locking system

To cancel out any possible residual slow phase drift between the OMO and the Linac accelerating voltage, a slow phase-lock system is foreseen lo have the 3GHz of the Linac tracking any residual OMO slow phase drift.

DAY-ZERO PHASE REFERENCE

The FERMI@elettra commissioning started back in August 2009; an in-house optical CW phase reference distribution system has been designed and installed.

The in-house CW system

The in-house CW phase reference system is based on COTS components [20] with excellent jitter performance. The FO transmitter (based on a DFB laser) modulates its optical carrier at 1550nm with the RF signal. The FO receiver extracts the modulation and converts the optical signal into and electrical one. Thanks to the transmitter power and the low attenuation of the links, the transmitter output is optically split 1-to-4, feeding up to four links. Two Miteq DFB lasers are housed in a single transmitter unit (fig. 4) which can drive up to 8 optical links.

Figure 4: the in-house CW dual optical transmitter unit.

The receiver unit is equipped with the Miteq receiver and an RF amplifier to match the RF output level.

The "Event" system

The bunch clock is distributed to the clients by the Event system, a VME commercial solution developed at Micro-Research Finland Oy [7].

The “event system” is based on:

- an optical fibre network with star configuration;
- a VME FPGA board, installed in the timing hutch (Event Generator, EVG, VME-EVG-230);
- a series of VME boards located atthe different clients (Event Receiver, EVR,VME-EVR-230RF
- a series of optical fan-out modules

The EVG receives the laser coincidence clock (78.895MHz) and the bunch clock (10-50 Hz) from the

Master time base. The series of EVR boards connected to the EVG through VME optical fan-outs, distribute the trigger with different optical (HFBR-1414/HFBR-1528) and electrical (TTL/NIM/LVPECL) levels. According to the specifications, a jitter of ~20ps_{RMS} has been measured for a TTL output signal at the EVR on a remote station.

The Master time base

The Master time base (MTB) generates the bunch clock (10Hz) and the laser coincidence clock (78MHz); both pre-bunch and post-bunch clocks are available.

The actual version of the Master time base is based on two evaluation boards: the AD9516EVAL from Analog Devices (synchronous division of the RMO frequency) and the XUP VIRTEX II PRO Development System to accomplish the bunch clock generation, the synchronization with the mains (220V AC) voltage zero-crossing and the communication link to the Timing system Computer.

The bunch clock parameters (repetition rate, pulse width and delay between pre-bunch and post-bunch) may be changed. The remote control the Master time base is implemented using the FPGA registers and RS-232. The FPGA circuits are synchronous with the input frequency to keep the jitter as low as possible.

The Master time base outputs interface to coaxial cables by means of fan-out buffer modules; TTL level signals are generated with additional LVDS buffers soon being provided.

FERMI OPTICAL CABLING

The optical fibres adopted by the FERMI timing system have been chosen to fulfil the following requirements:

- optical quality
- mechanical stability
- ease of installation and maintenance

The blown fibre solution has been adopted.

The Sirocco blown fibre system

The Prysmian Sirocco "blown fibre" system [21] has been identified as suitable for FERMI as it allows for improved flexibility, both in terms of maintenance and upgradability. These are key issues for a 24 hour / 7 days user facility. The optical fibres are compliant with the ITU-T G652.D telecom standard [22]. The fibres have been optically tested [23], paying special attention to the polarization mode dispersion (PMD), which may be an issue on long time scales where drift effects dominates the performance.

Each timing system client is served by an 8 single mode fibre bundle.

The installation of the FERMI fibre cabling

Two batches have been identified to lay down the optical fibres throughout the whole facility. The blowing fibre system is well suited to the FERMI progressive installation. All the fibres are laid down in the machine tunnel to exploit its temperature stability.

MEASUREMENT RESULTS

The FERMI timing system started its operation in July 2009; by then, the photo-injector and the first two accelerating sections were first put into operation. The phase reference was provided to the photo-injector laser and to K1 and K2 klystrons. The RMO, the master time base and the Event system were running. The measured RMO phase noise (fig. 5) has been measured to be less than 12fs_{RMS}.

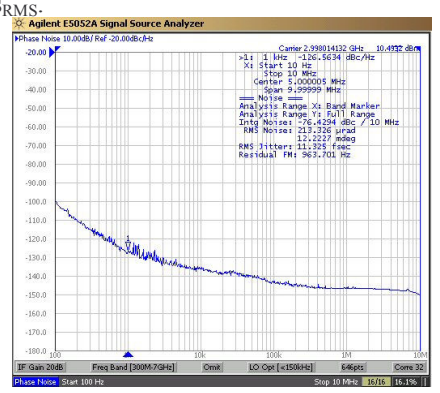

Figure 5: phase noise of the RMO measured in the 100Hz 10MHz offset frequency bandwidth.

As in the July 09 time frame, the pulsed optical phase reference system was under delivery, the phase reference has been temporarily routed to the laser by means of a phase stable coaxial cable instead. Thanks to the short distance between the laser and the timing hutch and to the good internal temperature stability of the building, also considering the jitter and drift specification of the photo-injector laser (≈100fs_{RMS}), this solution proved to be adequate for the first commissioning runs.

The first batch of fibre cables have been routed in 2009, the second batch being scheduled for May 2010.

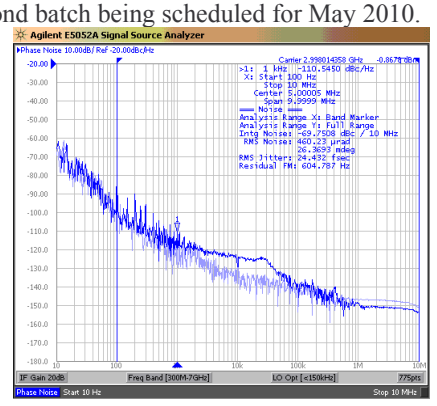

Figure 6: OMO locked (dark trace) to the RMO (light trace): phase noise profiles.

The installation of the pulsed phase reference system started also in July 2009. In figure 6, the measured phase noise of the OMO, when locked to the RMO using the BOM-PD, is presented. By the end of the year the stabilized link prototype has been installed as well.

Recently, the commissioning of the engineered link stabilization units has also started; the installation of the first three links (dedicated to the photo-injector laser, the

laser heater and bunch compressor BAMs) is scheduled for June 2010. Preliminary measurements of the out-of-loop (OOL) drift between a stabilized link and an output port of the splitter gave 8.6fs_{RMS} jitter over 80 hours.

The in-house developed CW phase reference system has been on-line through commissioning runs 1 and 2 to feed up to four RF plants. The jitter of the 3GHz phase reference signal as delivered in the klystron gallery, including a low noise RF amplifier, has been measured to be 18fs_{RMS} (fig. 7). Given the RMO phase noise (12fs_{RMS}) the contribution of the CW link is equal to 13fs_{RMS}.

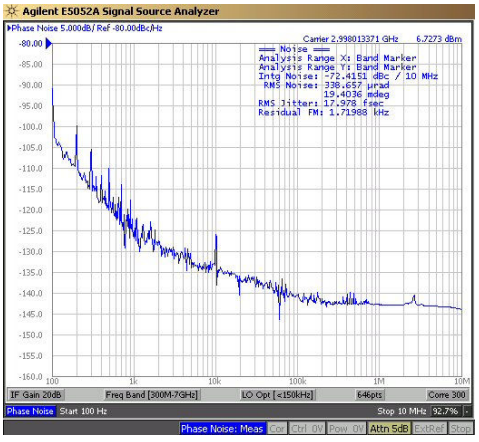

Figure 7: jitter measured on the 3GHZ phase reference signal at the end of the CW in-house link in klystron gallery by the RF plant K2.

A series of EVR boards have been used to drive the RF pulse for the klystrons; other EVR boards are used to trigger the BPM system, the Current Monitors, the Multi Screen, the bunch length monitor, the laser diagnostics and the Machine Protection system.

Polarization issues

Slow polarization fluctuations in the fibres show up as amplitude variations in the extracted optical pulses at the remote end, possibly causing unwanted drifts of the synchronized client. A State of Polarization (SOP) measurement set-up has been implemented on one FERMI fibre bundle. Polarization values have been logged over 96 hours, showing a peak-to-peak variation of ±2degree of the vectors on the Poincare' Sphere.

To cure the polarization issue, a polarization locker could be adopted. A polarization locker, by Thorlabs, has been tested in-field on a link fed by optical pulses at 157MHz. The polarization locker reduces by a factor of 10 the polarization fluctuations, whose effects on a phase locked client are now being quantified.

Temperature monitoring

The temperature of the timing hutch is kept constant at 22±0.2^{o}C; the temperature of the machine tunnel (first section, L=70m) has been measured to be constant at the same level over 4 months, a fundamental ingredient to the overall machine stability.

ACKNOWLEDGMENTS

The Authors wish to thank all the Colleagues at Sincrotrone Trieste who helped us in setting up the whole system, especially: R. Marizza, F. Debiasi, D. Baron, M. Miculin, I. Cudin and S. Noe'.

REFERENCES

[1] E. Allaria et al. "FERMI@Elettra: a seeded FEL facility for EUV and soft x-rays" FEL 2006, Berlin
[2] FERMI@Elettra Conceptual Design Report 2007
[3] RLE, Optics and Quantum Electronics Group; http://www.rle.mit.edu/oqe
[4] CBP, Electro-dynamics group, http://cbp.lbl.gov
[5] A.Winter et al "Layout of the Optical Synchronization system for FLASH", EPAC '06, Edinburgh, Scotland.
[6] EUROFEL FP6, http://www.eurofel.de
[7] Micro Research Finland Oy, http://www.mrf.fi/
[8] INWAVE gmbh, http://www.inwave-gmbh.de/
[9] J. Kim et al. "Drift-free femtosecond timing synchronization of remote optical and microwave sources", Nature Photonics 2, 733 - 736 (2008).
[10] F. Loehl, "Optical Synchronization of a Free Electron Laser with femto-second precision", Ph.D. Thesis at Hamburg University, 2009
[11] P. Craievich: FERMI Physics Requirement Document FPRD #005 "FERMI LInac Stability Requirements for the MLB mode"
[12] M. Ferianis "State of the Art in High-Stability Timing, Phase Reference Distribution and Synchronization Systems", PAC '09 Vancouver, Canada
[13] A. Winter et al. , "High-precision Laser Master Oscillators for Optical Timing Distribution Systems in Future Light Sources", EPAC '06, Edinburgh.
[14] J. Kim et all, “A Balanced Optical-RF Phase Detector”, CLEO 2006
[15] Menlosystems gmbh, http://www.menlosystems.com
[16] J. Kim et all, “Long-term femtosecond timing link stabilization using a single-crystal balanced cross correlator”,Optics Letters,Vol.32,pp.1044-1046, 2007
[17] Leon Pavlovic et al., “Bunch Arrival Monitor at FERMI@Elettra”, this conference
[18] J. M. Byrd, "Plans for precision RF controls for FERMI@elettra", PAC 07 Albuquerque, NM, USA
[19] J. M. Byrd et al., "Timing distribution in accelerators via stabilized optical fiber links" LINAC 2006 Knoxville, USA.
[20] p/n: LBL-50K3G Miteq, http://www.miteq.com/
[21] Sirocco Blown fibre system www.prysmian.com.
[22] ITU-T G.652: Characteristics of a single-mode optical fibre cable. http://www.itu.int/ITU-T/publications/recs.html
[23] A. Galtarossa "Relazione Tecnica alle misure di dispersione di Polarizzazione", Technical Note of the Photonics Group, Uni. Padua, http://peg.dei.unipd.it